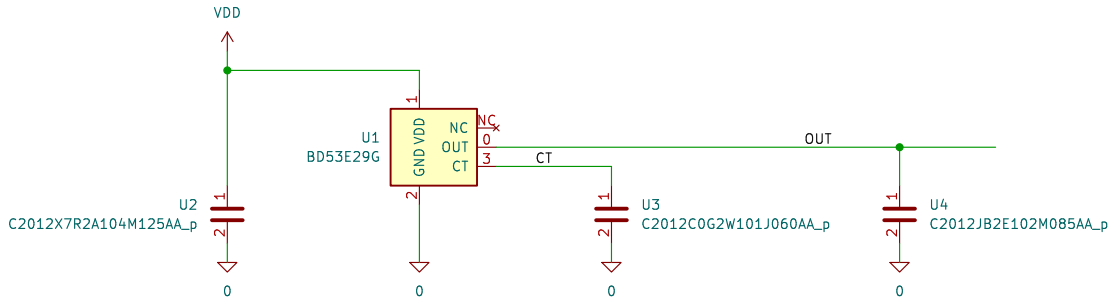

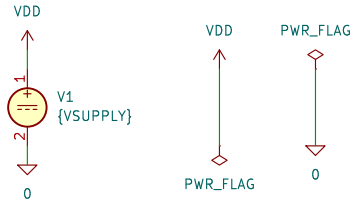

AE01002329
–
–
–
astroelectronic

Sheet: /
File: BD53E29G.kicad_sch

Title: 2.9V, CMOS Output Type, Adjustable Delay Voltage Detector

Size: A4	Date: 2024-12-28	**Rev: 2**
KiCad E.D.A. 8.0.7		Id: 1/1