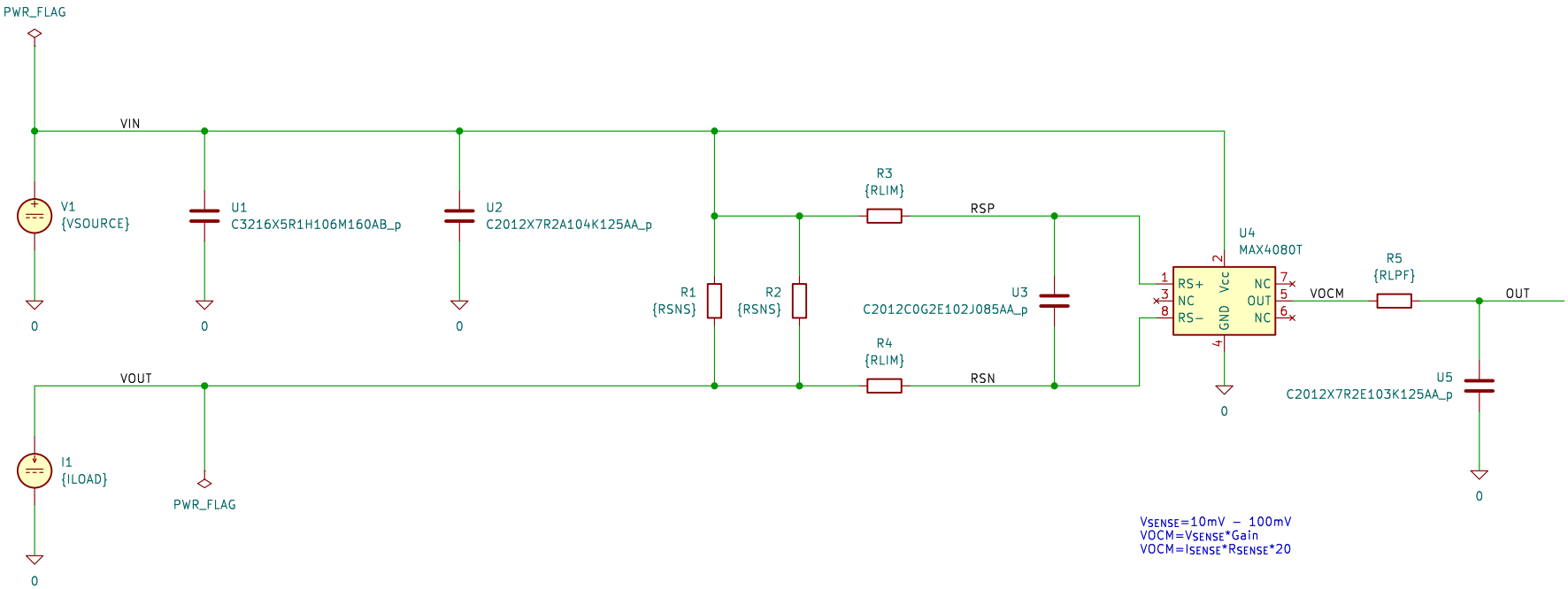


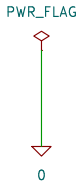


AE01001428
–
–
–
**astroelectronic**

Sheet: /
File: MAX4080T.kicad_sch

***Title: 76V, High–side, current–sense amplifiers with voltage output.***

| | | |
|---|---|---|
| Size: A4 | Date: 2024–10–10 | **Rev: 2** |
| KiCad E.D.A. 8.0.5 | | Id: 1/1 |