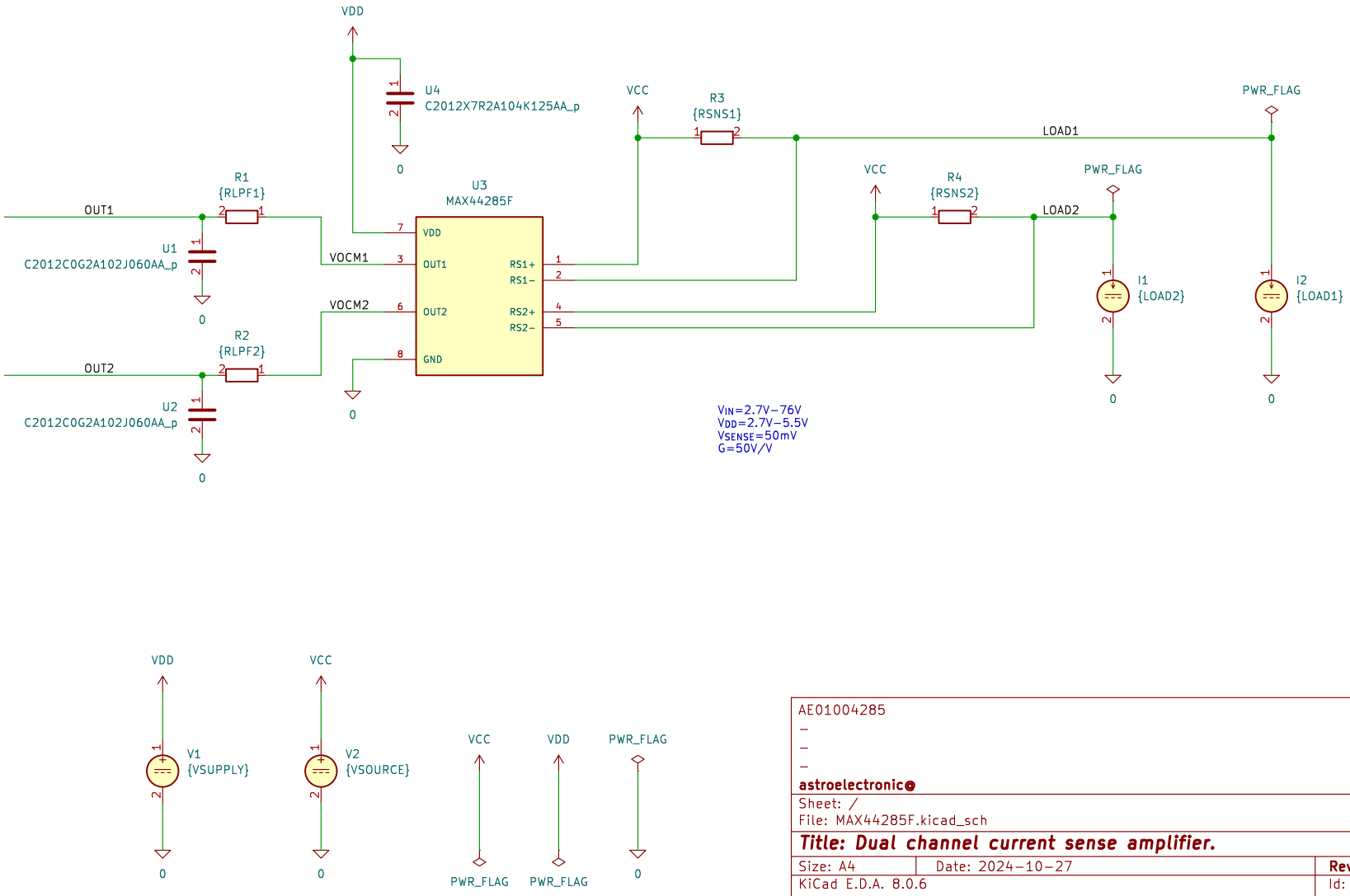

AE01004285
–
–
–
astroelectronic

Sheet: /
File: MAX44285F.kicad_sch

Title: Dual channel current sense amplifier.

Size: A4	Date: 2024-10-27	**Rev: 3**
KiCad E.D.A. 8.0.6		Id: 1/1