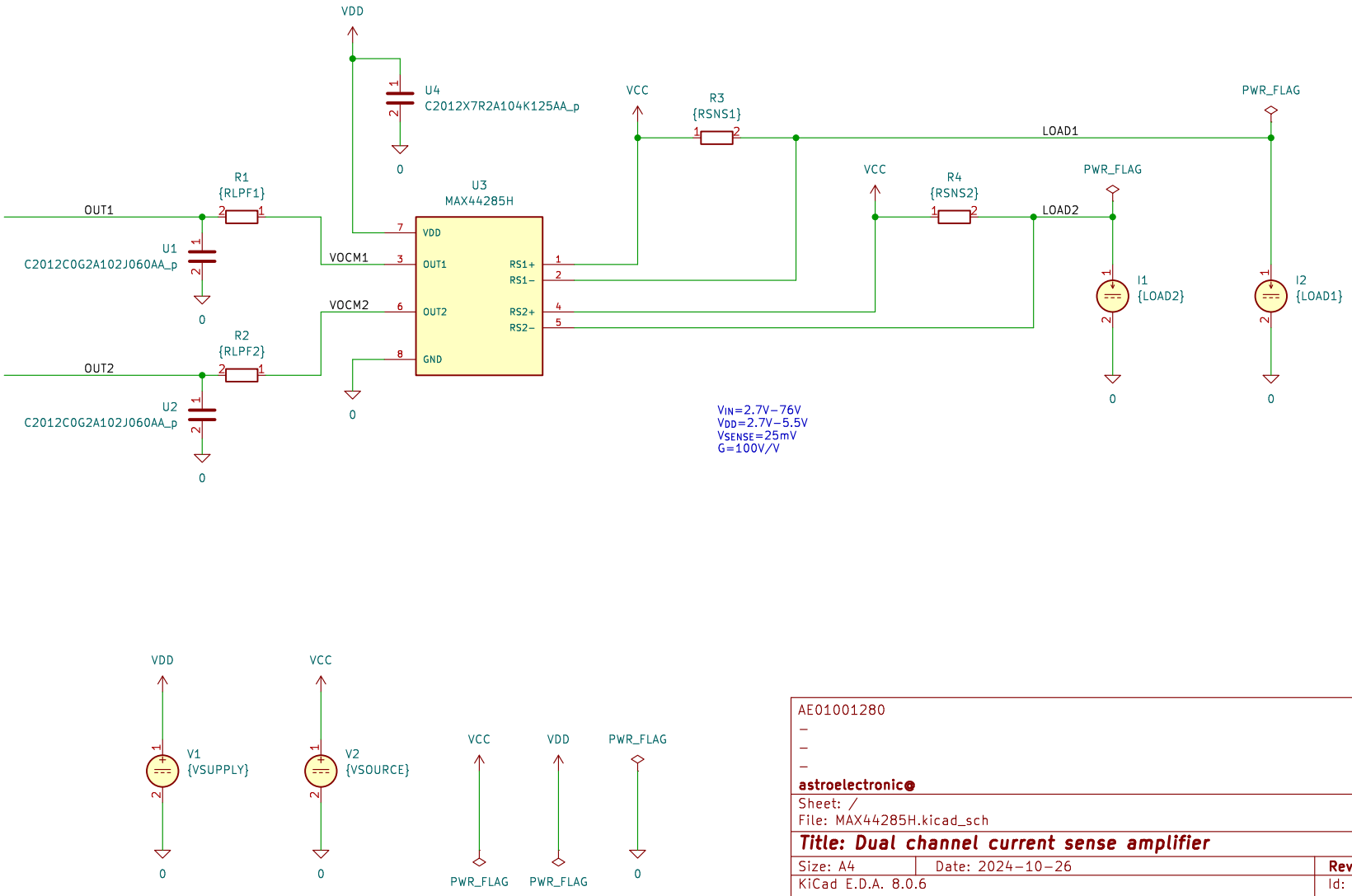

AE01001280
–
–
–
astroelectronic

Sheet: /
File: MAX44285H.kicad_sch

Title: Dual channel current sense amplifier

Size: A4	Date: 2024-10-26	**Rev: 2**
KiCad E.D.A. 8.0.6		Id: 1/1