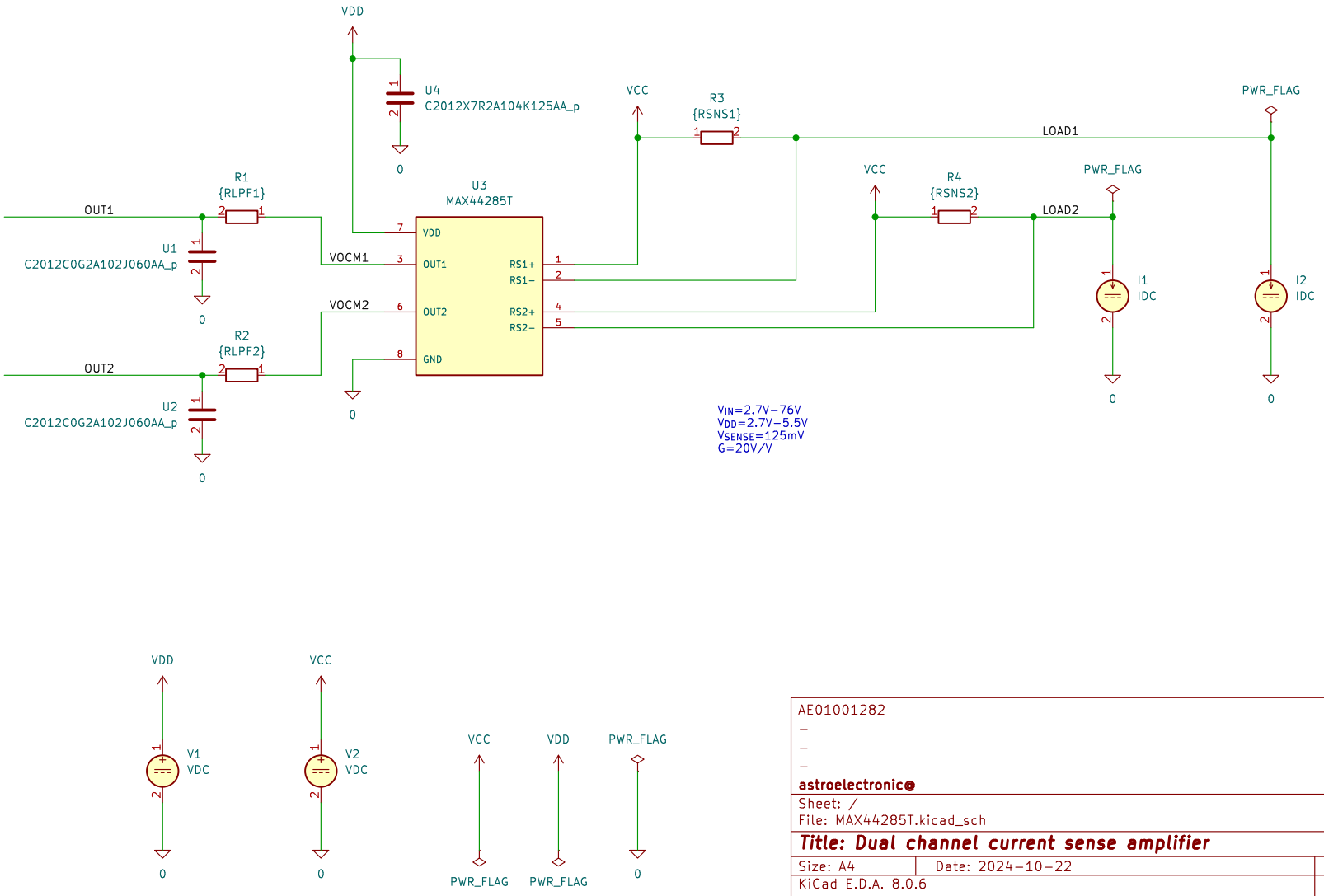

AE01001282
–
–
–
astroelectronic

Sheet: /
File: MAX44285T.kicad_sch

Title: Dual channel current sense amplifier

Size: A4	Date: 2024-10-22	**Rev: 4**
KiCad E.D.A. 8.0.6		Id: 1/1