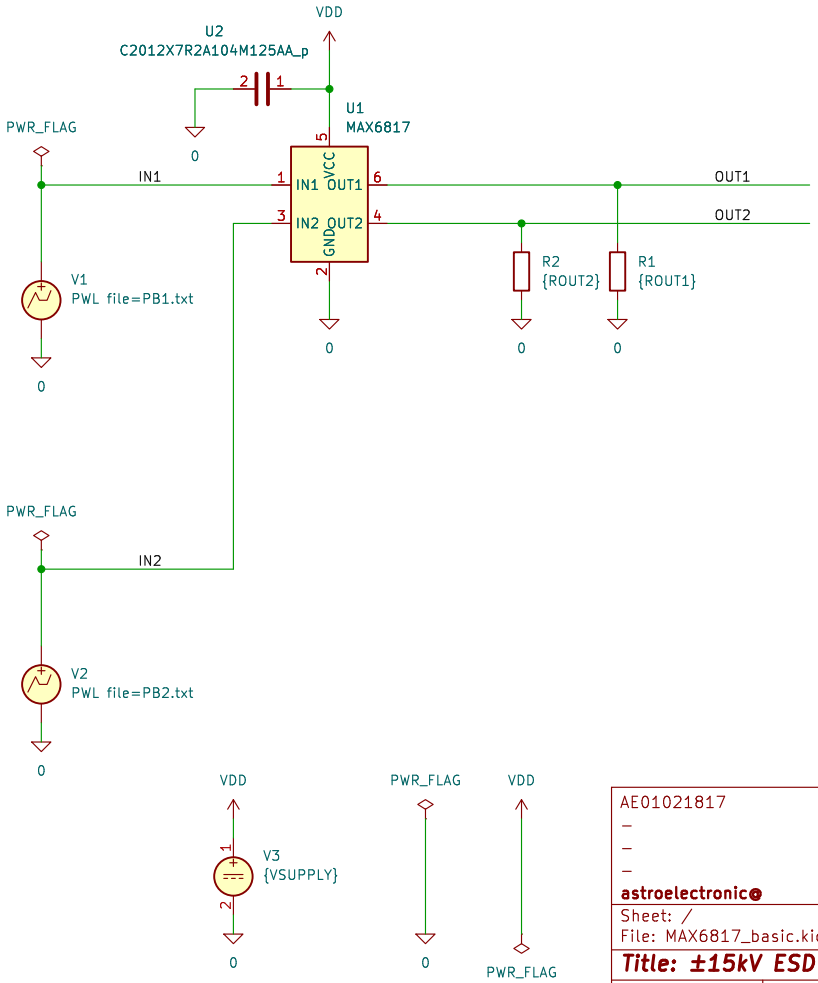

AE01021817
–
–
–
astroelectronic

Sheet: /
File: MAX6817_basic.kicad_sch

Title: ±15kV ESD-Protected, Dual, CMOS Switch Debouncer

Size: A4	Date: 2024-12-02	**Rev: 2**
KiCad E.D.A. 8.0.6		Id: 1/1