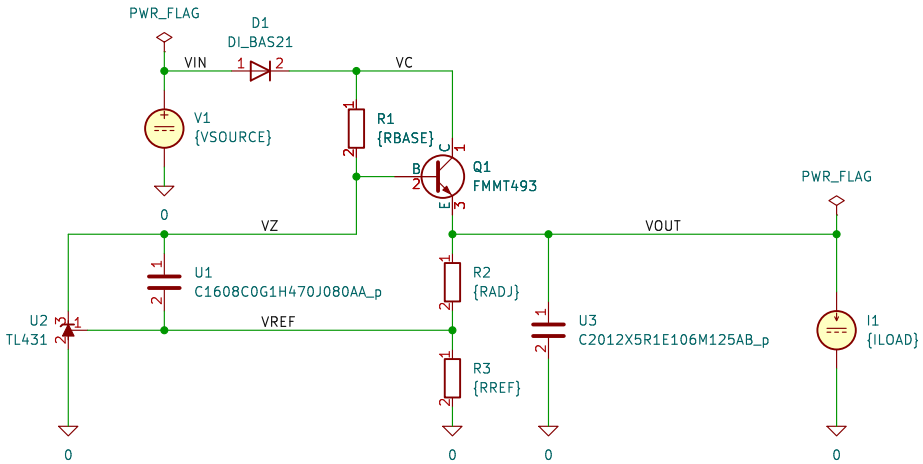

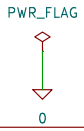

AE01020431
–
–
–
astroelectronic

Sheet: /
File: TL431_auto.kicad_sch

Title: Series regulator for automotive applications

Size: A4	Date: 2024-12-20	**Rev: 2**
KiCad E.D.A. 8.0.1		Id: 1/1