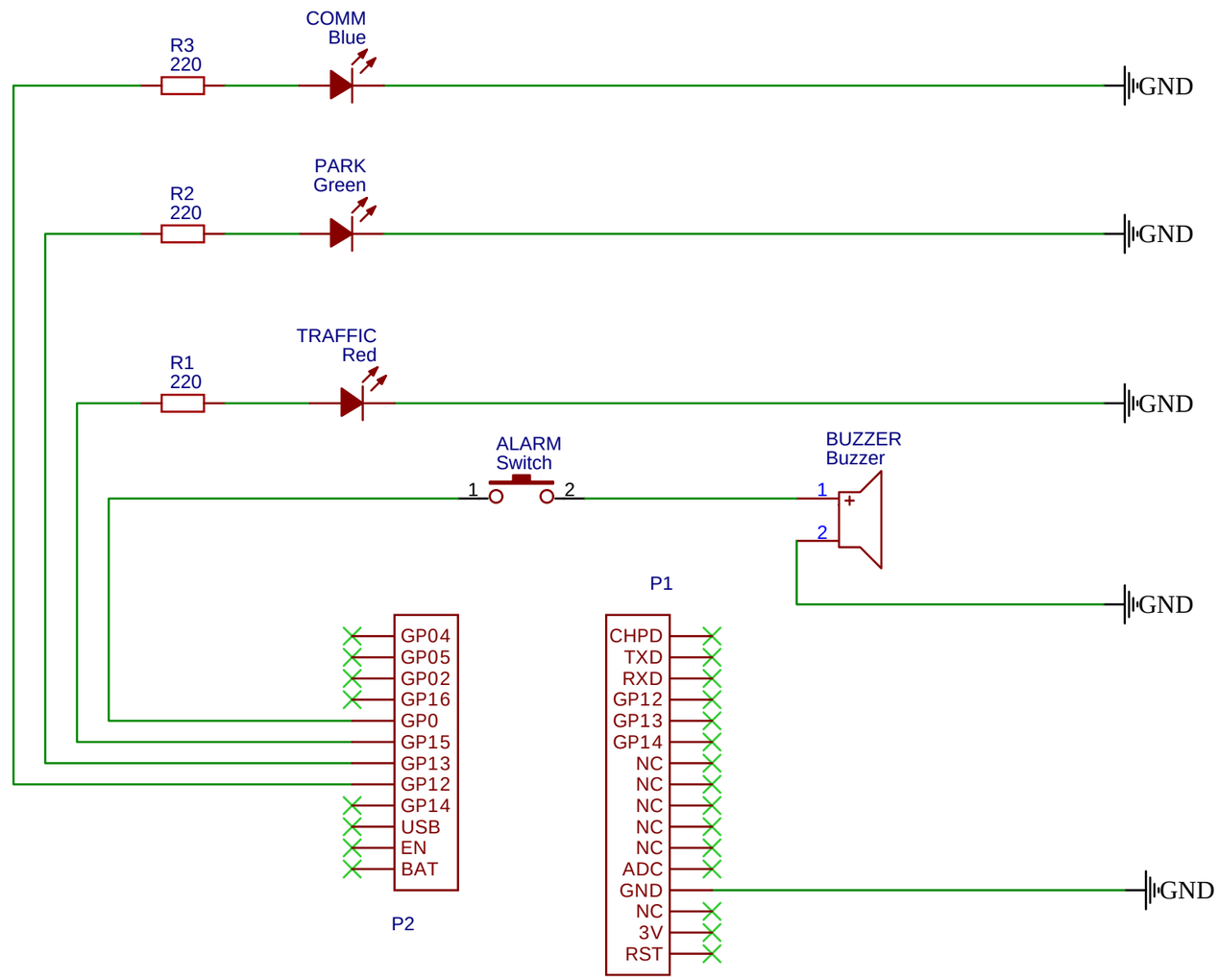

TITLE: Free Park, Traffic, Communication PCB		REV: 1.0
EasyEDA	Company: Deakin SIT210	Sheet: 1/1
	Date: 2021-05-22 Drawn By: John	