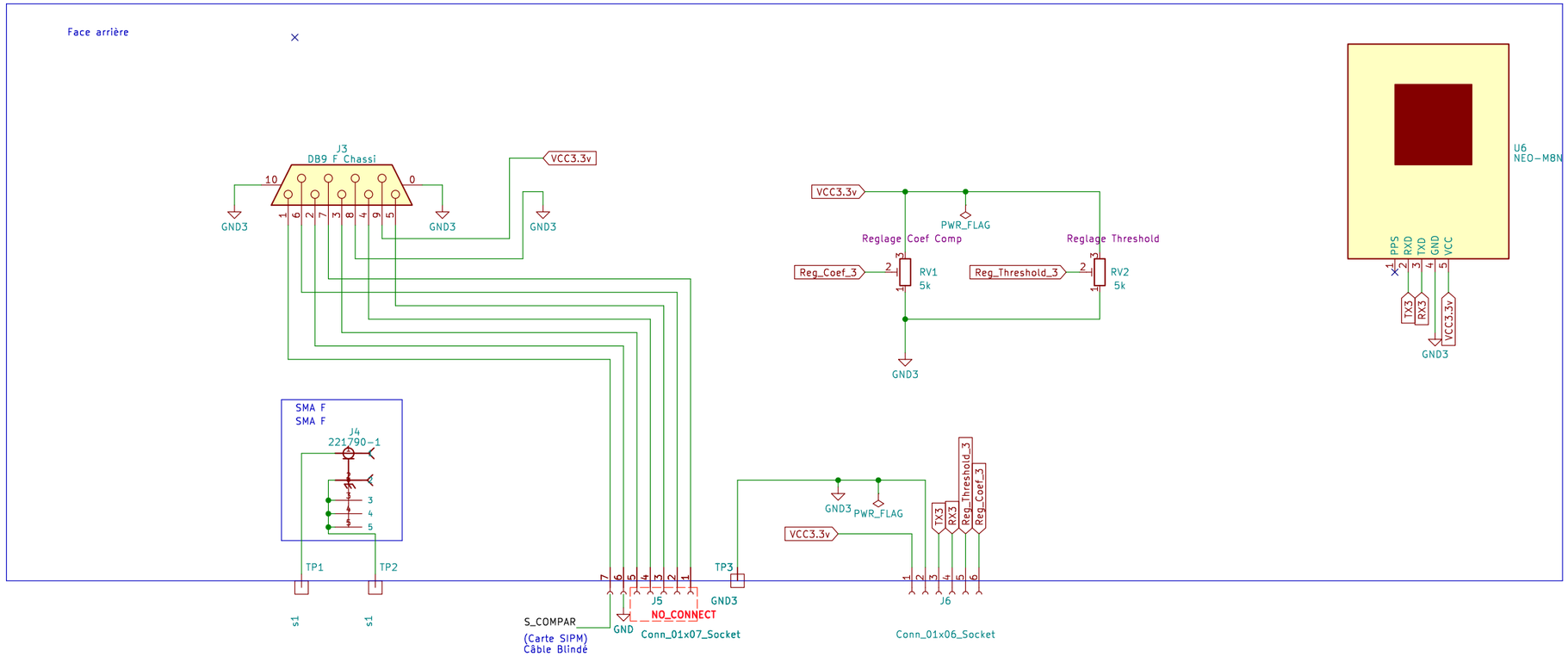

P&SC

Sheet: /

File: Muons_GPS.kicad_sch

Title:

Size: A3	Date: 2023-03-07	Rev: Carte GPS SIPM_V3
KiCad E.D.A. eeschema 7.0.9		Id: 1/1