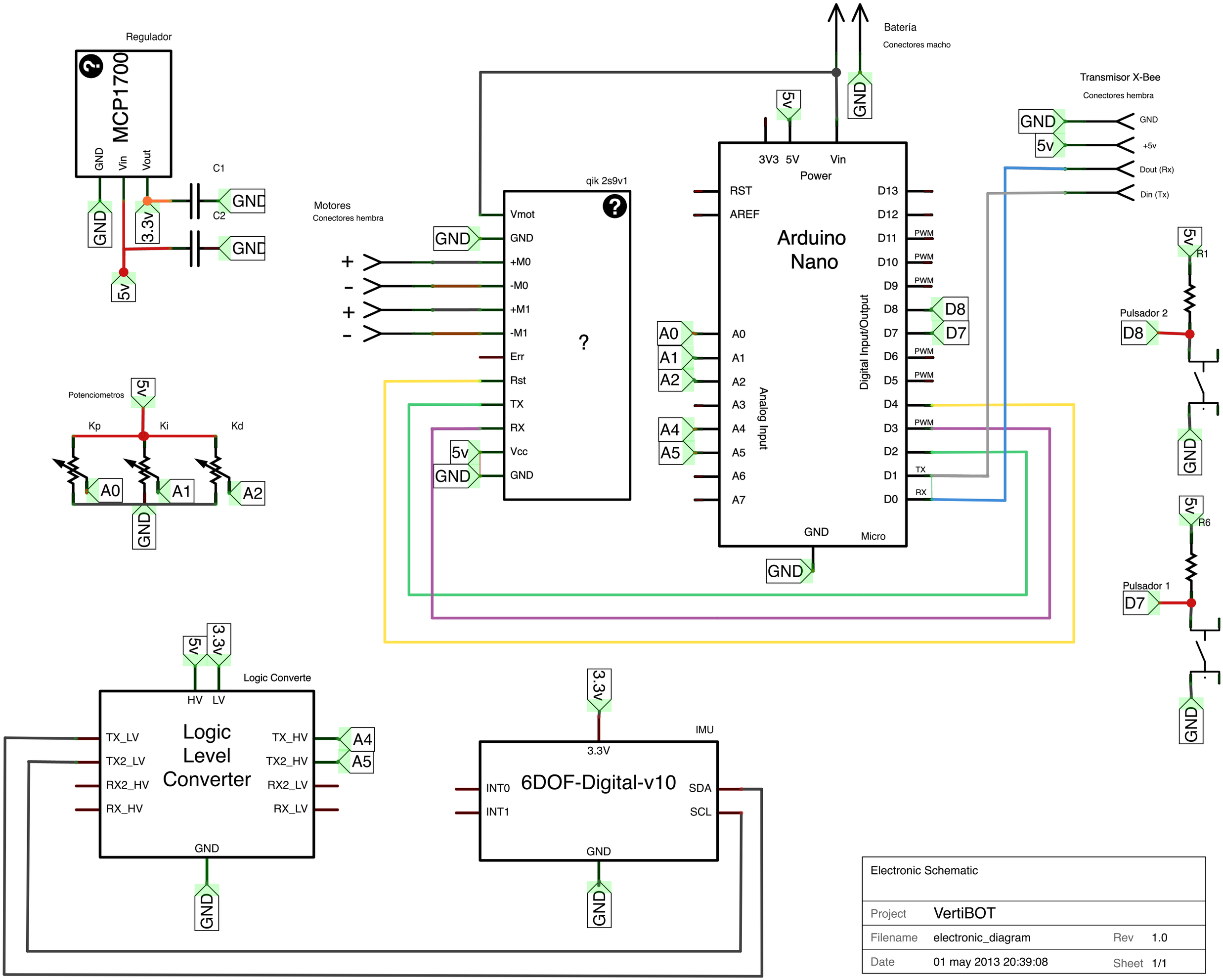

Electronic Schematic			
Project	VertiBOT		
Filename	electronic_diagram	Rev	1.0
Date	01 may 2013 20:39:08	Sheet	1/1

Made with Fritzing.org