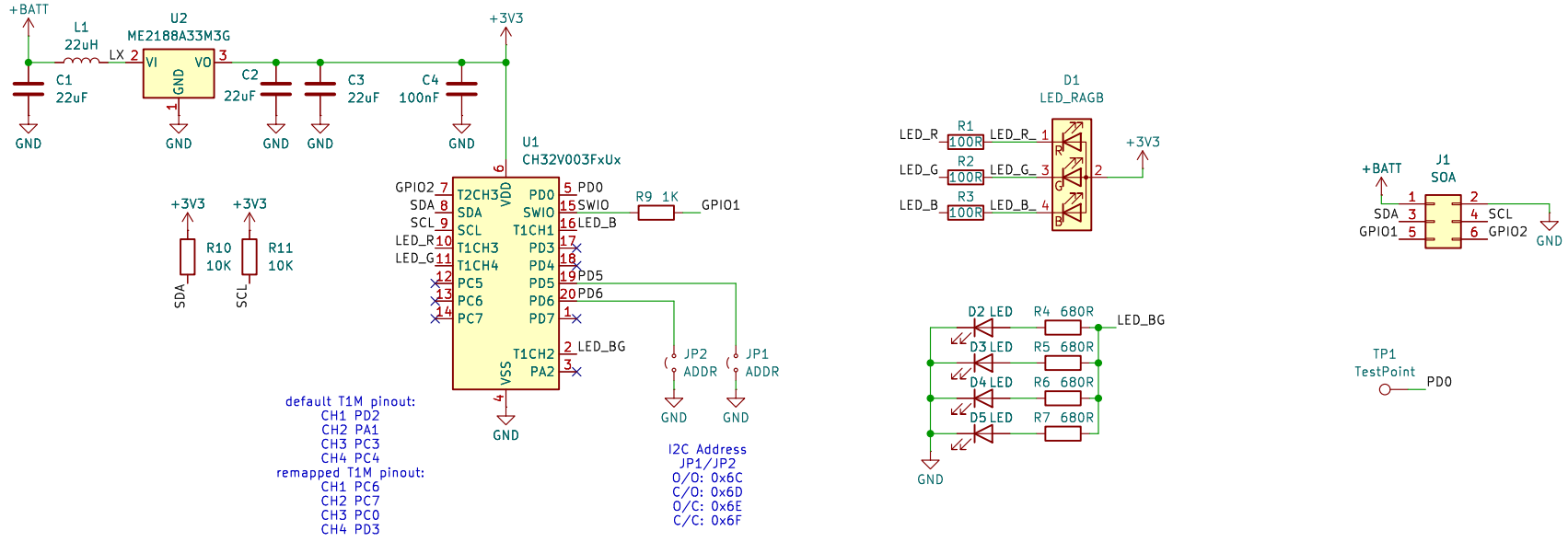

©2024 Adrian Studer
CERN-OHL-P

Sheet: /
File: duckjaws.kicad_sch

Title: duckJAWS

Size: A4	Date: 2024-10-14	Rev: 0.2
KiCad E.D.A. 8.0.5		Id: 1/1