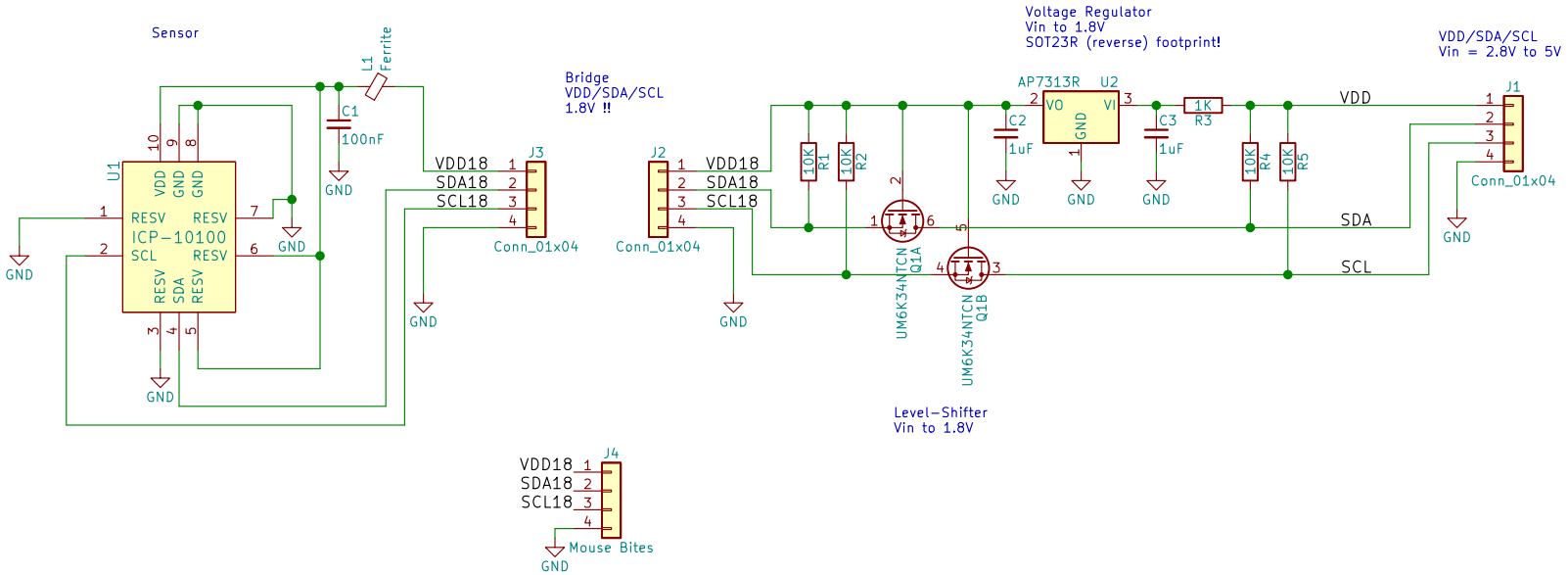

https://github.com/astuder/icp-101xx

Designed by Adrian Studer

Sheet: /

File: ICP-10100-breakout.sch

Title: TDK ICP-10100 Barometric Pressure Sensor Breakout

Size: USLetter	Date: 2018-05-22	**Rev: C**
KiCad E.D.A. kicad (5.1.10)-1		Id: 1/1