INSTRUMENTANIA 2014

First National Conference on Instrumentation and Control Engineering

27th – 28th June 2014

In Association With

ISTE Palakkad Chapter

Organized by

Department of Instrumentation and Control Engineering

N.S.S. COLLEGE OF ENGINEERING PALAKKAD

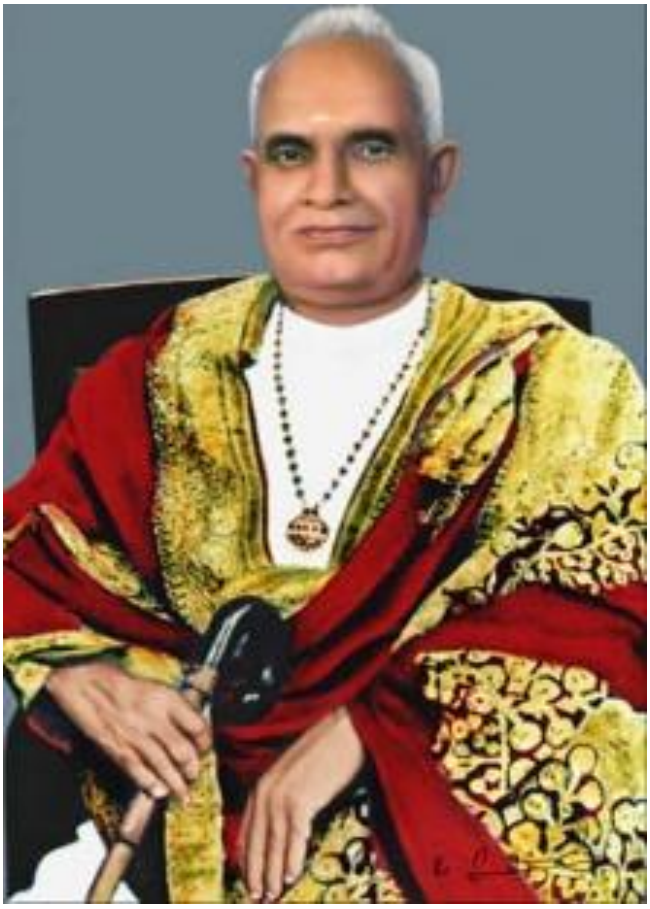

Sri. Mannathu Padmanabhan

Founder, Nair Service Society

Message from Principal

It is a matter of great pleasure that the Department of Instrumentation and Control Engineering of our Institution is organizing a National Conference 'INSTRUMENTANIA-2014' from 27th June to 28th June, 2014. I understand that the focus of this conference is to provide opportunity to faculty members, research scholars, working professionals and students to present their ideas and works, discuss, deliberate and formulate their plan for future work in their chosen field of Instrumentation and Control Engineering. As part of the conference, various technical events like technical exhibition, quiz, project presentation, design contest etc. are also being organized. These presentations and discussions during the technical festival will enable the faculty members and students to enhance their skills and exchange theirideas and information to keep abreast of the current developments.

My hearty congratulations to the HOD, coordinator and the organizing committee of 'INSTRUMENTANIA-2014' consisting of faculty members, students who have tirelessly worked to make this event a grand success. I sincerely wish all success for INSTRUMENTANIA-2014.

Dr. K. Geetha
Principal

Message from Chairman

I consider it a great privilege to welcome all delegates of 'INSTRUMENTANIA 2014', organized by the department of Instrumentation and Control Engineering of N.S.S. College of Engineering, Palakkad, Kerala to be held on 27th and 28th of June 2014.

The department is the only one of its kind in the University of Calicut. It aims at moulding high quality Instrumentation engineers with dedication and social commitment in the realm of Instrumentation engineering.

This Conference provides a platform for technical personnel to folk together and to review and discuss the pertinent topics related to Instrumentation and Control Engineering. The call has received an overwhelming response from experts from industry, academicians and students of Instrumentation and allied branches of technology.

I hope that the conference will be fruitful and will give a boost to the academic activities of the department and will inspire all those who are associated with it. I extend all cooperation and wish all success for the event.

Dr. Sreenadhan S
Chairman

ORGANISING COMMITTEE

Chief Patron

Sri. G. Sukumaran Nair
Chairman, Governing Body, NSSCE, Palakkad

Patron

Dr. K. Geetha
Principal, NSSCE, Palakkad

Chairman

Dr. Sreenadhan S.
Prof. & Head, ICED, NSSCE, Palakkad

Convener

Dr. N. Rajanbabu, Prof., ICED, NSSCE, Palakkad

Coordinator

Prof. Jayalakshmi B., ICED, NSSCE, Palakkad

Co-Coordinator & Chief Editor

Prof. Nikhilbinoy C., ICED, NSSCE, Palakkad

Co-Coordinator

Prof. Retheep Raj, ICED, NSSCE, Palakkad

Contents

TRACK 1: AEROSPACE ENGINEERING AND NAVIGATION

1. Autolanding Control for Disturbance Encountered Aircraft Landing — 1
   Nasni M. & Minu V.S
2. An Intelligent Pitch Displacement Autopilot for General Aviation Aircraft — 11
   Shekeela M.A., Femina V.P. & Minu V.S.
3. Robust Control Techniques for Motion Control in High Speed Sea Vessels — 21
   Nivya Pratap & Dr. Abraham T. Mathew

TRACK 2: BIOMEDICAL INSTRUMENTATION

4. An Integrated Remote Heartbeat Monitoring System — 37
   Manu Viswanadhan & Meera Viswanadh
5. Automatic Control of Hypotension by Drug Infusion — 47
   Pravika M. & Paul Joseph K.

TRACK 3: CONTROL ENGINEERING

6. H_∞ Control of the Backward Motion of A Tractor-Trailor for Parcking Purpose — 60
   Anjali S. Nair
7. Linear and Nonlinear Control Strategies for The Stabilization of Rotary Pendulum — 79
   Sooraj M.S. & Minu V.S.
8. Adaptive Integral Sliding Mode Control of Linear Variable Reluctance Motor for High Precision Application — 89
   Irfan Habeeb, Ismail E.K. & Abdul Jaleel E.
9. Speed Control of Permanent Magnet Stepper Motor Using Model Predictive Control — 99
   Farsana Muhammed & Rijin Raju
10. Performance of Sliding Mode Controller for Minimizing Commutation Torque Ripple in Permanent Magnet Brushless DC Motor — 108
    Jesna Sashindran & Jayasree N.R.
11. Adaptive Control Scheme for Binary Distillation Column — 118
    Akhila P. & Nafeesa K.
12. Balancing of A Two Wheeled Inverted Pendulum Model — 128
    Sabitha K.T. & K.M. Moideen Kutty
13. Design of Robust Controller for Levitation Control ofMAGLEV Train — 138
    Sofia R. & Dr. Abraham T. Mathew

14. Role of Scheduling in Control System Design 157
Nikhilbinoy C.
15. Dynamic Sliding Mode Speed Control of A Permanent Magnet Synchronous Motor 162
Jyothilakshmi J. & Dr. Abraham T. Mathew

TRACK 4: DIGITAL SIGNAL PROCESSING

16. FIR Windowing Based Wireless Electronic Stethoscope Using DSP 175
Chetan Pawar, Dr. Uttam Chaskar & Hardik Parmar

TRACK 5: DRIVES AND CONTROL

17. Pulse Density Modulation Scheme on Matrix Converters 184
Anilett Benny & Dr. T. Ruban Deva Prakash
18. A Novel Space Vector PWM Scheme Based Maximum Boost Control for Z Source Inverters 190
Juby Jose, Jithin K. Sajeev & Roshny Mary B.

TRACK 6: EMBEDDED SYSTEMS

19. Motor Protecting System Using PIC Microcontroller 199
Haritha H., Anitha R., Arjun K.P., Jayasurya N.S. & Sudheer P.
20. Communication Aid for Verbally Handicapped 208
Asha Prasad, Gokul G., Aswin B., Abhilash K.M. & Sujith K.
21. Vehicles Sixth Sense (An Embedded Applications) 220
V. Aravindan & Jyothi Esakki

TRACK 7: INSTRUMENTATION

22. Blood Donor Finder 228
Lakshmi Siva Sankar, Indhulekha K.J., Sajina Azeez, Suhila V.M. & Sandhya K.R.
23. Testing and Calibration of Instruments – A Review 238
Meera Viswanadh & Shreyas Prakash

TRACK 8: INTELLIGENT CONTROL

24. Maximum Power Point Tracking Using Fuzzy Logic Control for Photovoltaic Systems 246
Anjali J. Nair, Drishya M., Harshad P.A., Prajith M.K. & R. Umamaheswaran
25. Fuzzy Control Scheme for Arterial Blood Pressure Regulation in Hypertesnive Patients 251
Anju Cheriyachan & Nafeesa K.

TRACK 9: POWER SYSTEMS AND ELECTRONICS

26. Comparing Harmonic Distortions in Icosikaitetragonal and Dodecagonal Voltage Space Vector Modulations — 258
    Antony K. Peter & Baby Kavitha M.V.
27. A Review of Matrix Converters Applied to Wind Energy Conversion Systems of Small Capacity — 266
    Manikumar V.M.
28. An Online UPS Scheme With Line-Side Power Factor Correction — 276
    Sajin Babu & Smitha N.P.
29. STATCOM Based Power Quality Improvement For Grid Connected Wind-Solar Hybrid Energy System — 286
    Vimal P., Easwaran Namboothiri, Suresh T. & Santhosh Kumar K.B.
30. Maximum Power Point Tracking on Resonant High Boost Ratio Transformer Based DC-DC converter — 300
    Sudin S.K. & Sujith S.

TRACK 10: ROBOTICS

31. Robust Position and Sway Control of Under-Actuated Onshore Container Crane System — 308
    Smitha G. & Abraham T. Mathew
32. Vibration Control of 3D Gantry Crane with Precise Positioning — 323
    Ajayan M. & Nishad P.N.
33. Robust Design of Gantry Crane — 333
    Sajitha K.S. & Roshin R.

TRACK 11: PROCESS CONTROL

34. Wireless Control System for Industries — 343
    Jayalakshmi B. & Haritha H.
35. Process Control in Signal Transmission — 351
    S. Kalyani Sundaram & A. Anushya
36. CFD Modeling and Simulation of Oil/Water Separation in A Novel Hydro Cyclone Using Fluent Software — 362
    Jinish K., Manilal A.M. & Dr. P.A.Soloman
37. Starting Process of a Furnace in A Caustic Soda Plant Using PLC — 372
    S. Indu, S.C.Thisanth & M. Brindha
38. Automation of Ilmenite Grinding System Using PLC — 384
    Nikhilesh J.R., Hemanth R.S., Kannan R.S. & Prem Sanker
39. Speed And Torque Control of Two-Mass Drive System Using Fractional Order PID Controller — 391
    Deepu S. Devan & Dr. T.K.Sunil Kumar

MOTOR PROTECTING SYSTEM USING PIC MICROCONTROLLER

HARITHA.H , ANITHA.R ,ARJUN.K.P , JAYASURYA. N.S

S7 EEE, N.S.S. College of Engineering, Palakkad-8

parunandhanam@gmail.com

Sudheer p,

Assoc.Professor, EEE Dept

N.S.S. College of Engineering, Palakkad-8
Sudheerparakkat@gmail.com

Abstract

Motors are the heart of the load in any manufacturing and process industries. They drive the conveyors, pumps, fans, blowers, cranes, compressors, mills, extruders and so many production and process equipments. Hence motors become very critical in the today's industry and they are to be protected at all costs as the failure of motors cause enormous money loss due to production loss, downgrading of the processed materials and production of scrap. Also the rhythm of production is affected and hence productivity suffers. Most of the motor failure contributors and failed motor components are related to motor overheating. Thermal stress can potentially cause failure of all major parts: stator, rotor, bearing shaft and frame. Therefore with the complex nature of the loads of the motor and capability of the motor in mind, one has to carefully utilize the motor to its safe operating level without damaging it. Under utilization of the motor and also spurious tripping are to be avoided. Hence a complex motor protection system is the basic requirement which satisfies all the relevant factors. In this work authors make an attempt to develop a motor protecting system using PIC microcontroller with over voltage protection, under voltage protection, overload protection, Temperature rise protection and over current protection.

Key words: PIC Microcontroller Motors, over voltage protection, Temperature rise protection, over current protection.

1. Introduction

Motors are inevitable things in the process industries. Motor protection is required for safety of both user and the system equipment itself from fault. Hence electrical motors are not allowed to operate without any protection devices installed. With the complex nature of the loads of the motor and capability of the motor in mind, one has to carefully utilize the motor to its safe operating level without damaging it. The undesirable conditions such as over load, over current and over voltage under voltage and temperature rise must be prevented for the safety of motors[1].With the increasing loads, voltages and short-circuit duty in distribution system, over current protection has become more important today. Over current is defined as any current in excess of the rated current of equipment or the capacity of a conductor. The protective devices are designed to keep the flow of current in a circuit at a safe level. This paper will discuss the study about significant parts of protection system. It also includes the PIC Microcontroller which is 'the brain' for the protection system [2]. Figure 1 shows an example of normal and excessive current flow.

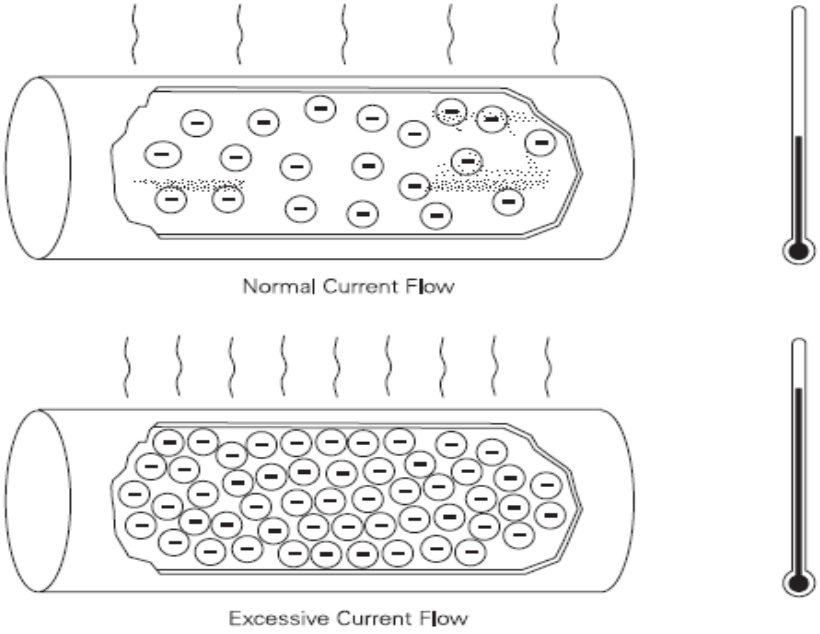

Figure 1: Over Current Flow

2. Methodology

Block Diagram of the proposed work is illustrated in the figure 2

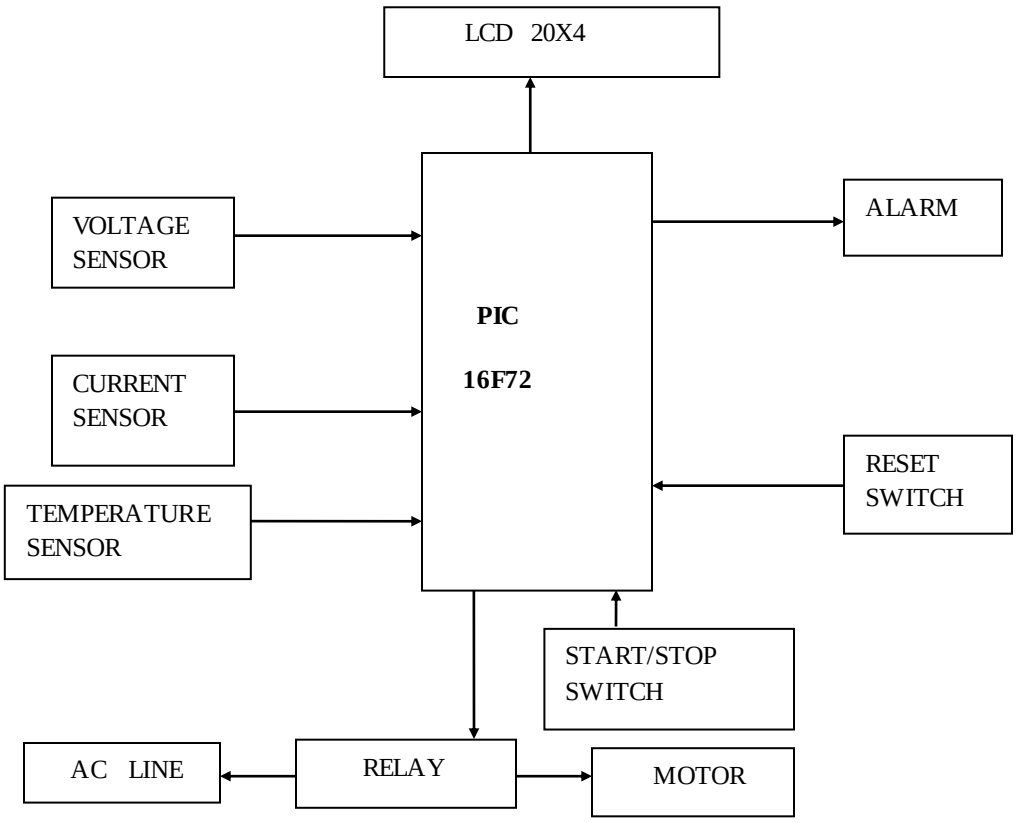

Figure2 Block diagram

Components used for the protection system are PIC Microcontroller 16F877A, centre tapped, step down Transformer - 230/10 v, bridge Rectifier-, regulator-7805,switch(start/stop), seven segment LCD display, potential transformer, temperature sensor- LM35, transistor-BC548, relay drivers and crystal oscillator(of 4MHZ) .

2.1 PIC Microcontroller (16F87A)

Pin Diagram of the micro controller is as shown in figure 3.

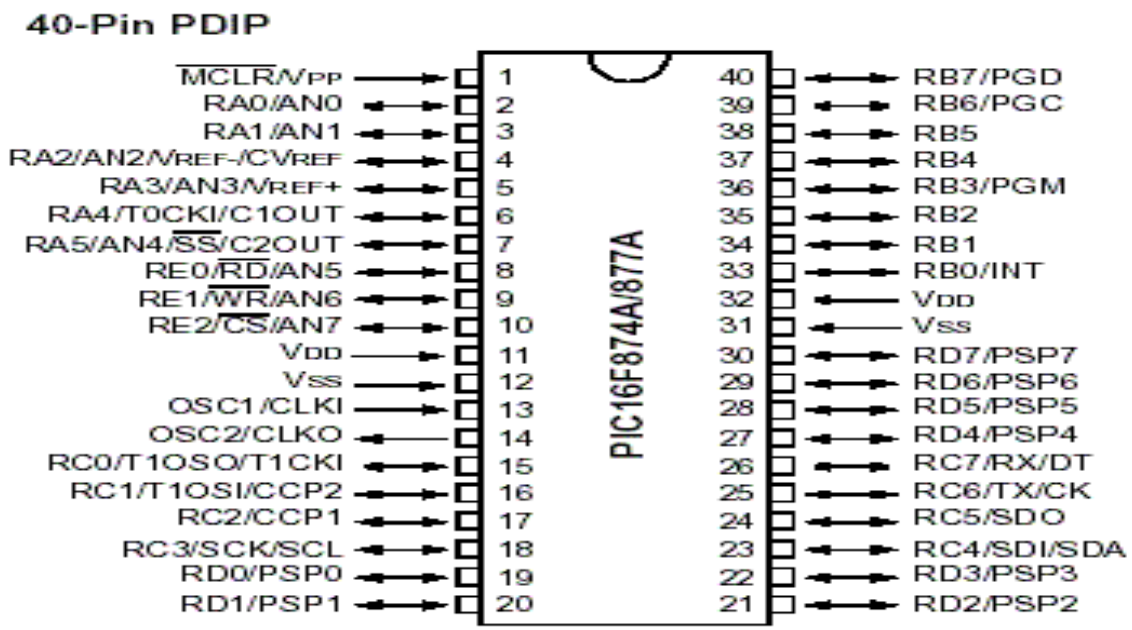

Figure 3 Pin Diagram

2.2 IC Voltage Regulators

A voltage regulator is one of the most widely used electronic circuitry in any device. A regulated voltage (without fluctuations & noise levels) is very important for the smooth functioning of many digital electronic devices. A common case is with micro controllers, where a smooth regulated input voltage must be supplied for the micro controller to function smoothly. Voltage regulators are of different types. In this article, our interest is only with IC based voltage regulator. An example of IC based voltage regulator available in market is the popular 7805 IC which regulates the output voltage at 5 volts. An IC voltage regulator is an integrated circuit whose basic purpose is to regulate the unregulated input voltage and provide with a constant, regulated output voltage. An IC based voltage regulator can be classified in different ways. A common type of classification is 3 terminal voltage regulator and or 5multi terminal voltage regulator. Another popular way of classifying IC voltage regulators is by identifying them as linear voltage regulator & switching voltage regulator. There is a third set of classification as 1) Fixed voltage regulators (positive & negative) 2) Adjustable voltage regulators (positive & negative) and finally 3) Switching regulators [3]. In the third classification, fixed & adjustable regulators are basically versions of linear voltage regulators.

2.3 Liquid Crystal Display

A liquid-crystal display (LCD) is a flat panel display, electronic visual display, or video display that uses the light modulating properties of liquid crystals. Liquid crystals do not emit light directly. LCDs are available to display arbitrary images (as in a general-purpose computer display) or fixed images which can be displayed or hidden, such as preset words, digits, and 7-segment displays as in a digital clock. They use the same basic technology, except that arbitrary images are made up of a large number of small pixels, while other displays have larger elements. LCDs are used in a wide range of applications including computer monitors, televisions, instrument panels, aircraft cockpit displays, and signage. They are common in consumer devices such as video players, gaming devices, clocks, watches, calculators, and telephones, and have replaced cathode ray tube (CRT) displays in most applications. They are available in a wider range of screen sizes than CRT and plasma displays, and since they do not use phosphors, they do not suffer image burn-in. LCDs are, however, susceptible to image persistence. The LCD screen is more energy efficient and can be disposed of more safely than a CRT. Its low electrical power consumption enables it to be used in battery-powered electronic equipment. It is an electronically modulated optical device made up of any number of segments filled with liquid crystals and arrayed in front of a light source (backlight) or reflector to produce images in color or monochrome. Liquid crystals were first discovered in 1888. By 2008, annual sales of televisions with LCD screens exceeded sales of CRT units worldwide, and the CRT became obsolete for most purposes.

2.4 current sensors

A current sensor is a device that detects electrical current (AC or DC) in a wire, and generates a signal proportional to it. The generated signal could be analog voltage or current or even digital output. It can be then utilized to display the measured current in an ammeter or can be stored for further analysis in a data acquisition system or can be utilized. The sensed current and the output signal can be:

• Analog output, which duplicates the wave shape of the sensed current

• BIPOLAR output, which duplicates the wave shape of the sensed current

• Unipolar output, which is proportional to the average or RMS value of the sensed

• Unipolar, with a unipolar output, which duplicates the wave shape of the sensed

• Digital output, which switches when the sensed current exceeds a certain threshold

The temperature sensor is constructed with materials of various physical properties with temperature variation of the sensor and let the temperature converted to electricity. This regularly changes the physical properties of the main body temperature. Sensor is a core part of the temperature measuring instruments. Wide varieties of sensors are available in the market. With respect to measurement methods, sensors can be divided into contact and non-contact types. According to the characteristics of sensor materials and types of electronic components, they can be classified into resistance thermometers and thermocouples. In this work, LM35 is used as the temperature sensor. In this type, there exists a linear relationship between the output voltage and temperature. For every 1°C rise in temperature, output voltage will increase. Incremental increase in output is 10 mv.

2.5 Buzzer

A buzzer or beeper is an audio signaling device, [4] may be mechanical, electromechanical, or piezoelectric. Typical uses of buzzers and beepers include alarm devices, timers and confirmation of user input such as a mouse click or keystroke. A joy buzzer is an example of a purely mechanical buzzer. Early devices were based on an electromechanical system identical to an electric bell without the metal gong. Similarly, a relay may be connected to interrupt its own actuating current, causing the contacts to buzzer. Often these units were anchored to a wall or ceiling to use it as a sounding board. The word "buzzer" comes from the rasping noise that electro mechanical buzzers made. A piezoelectric element may be driven by an oscillating electronic circuit or other audio signal source, driven with a piezoelectric audio amplifier. Sounds commonly used to indicate that a button has been pressed are a click, a ring or a beep.

2.6 Relay

A relay is an electric ally operated switch. Many relays use an electromagnet to mechanically operate a switch, but other operating principles are also used, such as solid state relay. Relays are used where it is necessary to control a circuit by a low-power signal (with complete electrical

isolation between control and controlled circuits), or where several circuits must be controlled by one signal

2.7 Rectifier

A rectifier is an electrical device that converts alternating current (AC), which periodically reverses direction, a process known as rectification. Here bridge rectifiers are used. The bridge rectifier circuit produces a higher output voltage than the conventional full-wave rectifier circuit

2.8 Filter

The capacitor is used after rectification for filtering the rectified output. Then the rectified output is regulated by using regulator IC LM7805.The capacitor is connected to the input of the regulator to eliminate inductive effect due to long distribution leads. The output capacitor improves the transient response .They are common in electrical and electronic equipment and cover a number of applications, such as:

- Glitch removal on direct current (DC) power rails
- Radio frequency interference (RFI) removal for signal or power lines entering or leaving equipment
- Capacitors used after a voltage regulator to further smooth dc power supplies

3. Circuit Diagram

Circuit diagram of the proposed work is as illustrated in the figure 4.

4. Working

A 230v AC is given to the circuit. For the proper working of a PIC microcontroller, only a voltage of 5v is required. For the above purpose a centre tapped step down transformer is used which is connected to microcontroller. A range of standard values of various parameters like voltage, temperature and current are initially set in the microcontroller chip. Here a voltage sensor (potential transformer) is used to sense the voltage of the motor. On comparing the standard values with the present voltage, if a difference occurs; a signal is passed simultaneously to buzzer and relay from the controller .On receiving the signal, buzzer will beep and relay

contact turns off and hence the motor shuts down .Similarly the above procedure is repeated for other parameters also using appropriate sensors .By using a seven segmented LCD current status of the parameters [5]. Advantages of this system are: It is comparatively cheaper, simpler in construction, improves life span of motor and protects from overload conditions.

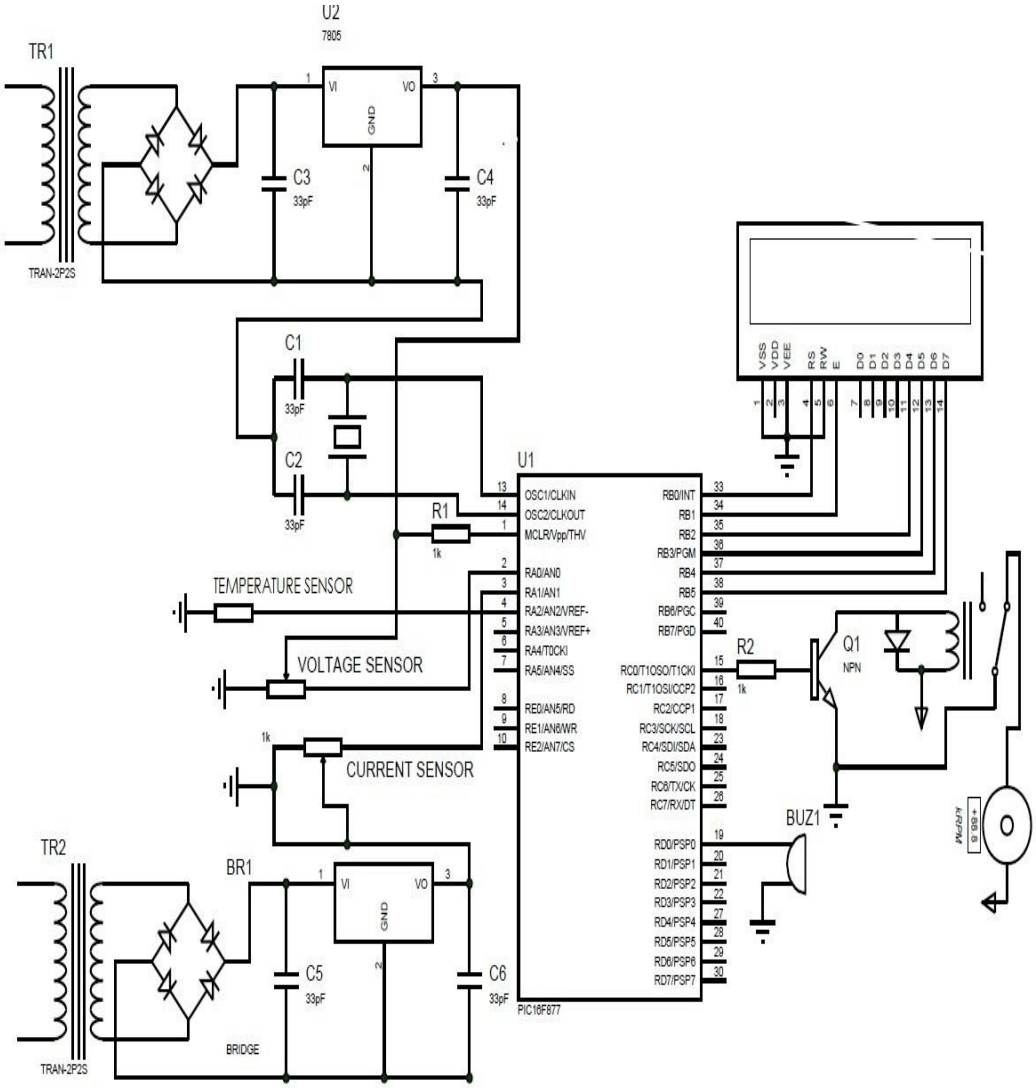

Figure 4 Circuit diagram

5. Conclusion

A motor winding has a generally accepted life expectancy of 18 years when operated at rated internal temperatures. However bearings often fail before the winding. Thus the objective of providing quick response with motor over load protection is to have the benefit of the maximum life time of the motor winding. Enhanced motor protection will therefore not only lower motor winding and repair costs but will also lower over-all down time and yield and hence increase in production. Authors studied about all the basic issues that can occur to a motor and how these issues are monitored using embedded electronics. This may help the author's in future industrial jobs by knowing the basics and understanding of how these motors can be protected.

REFERENCE:

[1] P S Bimbra: Electrical Machinery, Khanna publishers

[2] Muhammad Ali Mazidi and Janis Gillispie Mazidi: The 8051 Microcontroller and Embedded System, Pearson Education 2007

[3] Nagrath I J and Kothari D: Electrical Machines, Tata Mc Graw Hill

[4] Denu Streetman, Sanjay Banerjee: Solid State Electronic Devices

[5] Vincent Del Toro: Electrical Machines and Power System, Prentice Hall

COMMUNICATION AID FOR VERBALLY HANDICAPPED

Asha Prasad, Gokul G, Aswin.B, Abhilash.K.M, Sujith.K

Department Of Electronics and Communication Engineering, Government Engineering College, Sreekrishnapuram Palakkad(Dist.), Kerala, 678633, India

ashaprasad007@gmail.com

gokulg2008@rediffmail.com

aswin191993@gmail.com

Abstract

Inspired by several successful developments in the area of speech recognition and instrumentation by institutions like Defense Advanced Research Project Agency (DARPA), Cornell University etc., we introduce a new communication aid for the verbally disabled people ; A handy one-way American Sign Language Translator. We strongly believe that such a device will be very much helpful for deaf and dumb people around the world. We use a system that uses a glove which the user have to wear which detects the signs produced by the users hands, especially palm. As an initiative effort, we have used a single glove which produces output through a 16 x 2 LCD and an EMIC2 Text To Speech module, which produces speech output. Finally, we describe the results of high accuracy with a vocabulary of 26 alphabets and 5 basic words.

Key words: ***EMIC2, Text-to-Speech, American Sign Language, DARPA***

1. Introduction

Communicating with individuals who are deaf &dumb is a unique experience. The language, mode, style, speed, and aids and devices used to facilitate communication are different from person to person. If you are interpreting for an individual who is deaf and/or dump you will need to know what adaptations you should be aware of. Usually the deaf and/or dumb people are very slow in communication and many times the others feel it very difficult to understand what they are actually trying to say. This project is about giving the dumb and/or deaf people a communication aid and hence the ability to convey their messages to the real world.

"Speech" and "gestures" are the expressions, which are mostly used in communication between human beings. Learning of their use begins with the first years of life. Research is in progress that aims to integrate gesture as an expression in Human- Computer Interaction (HCI) [11]. In human communication, the use of speech and gestures is completely coordinated. Machine gesture and sign language recognition is about recognition of gestures and sign language using computers. A number of hardware techniques are used for gathering information about body positioning; typically either image-based (using cameras, moving lights etc) or device-based (using instrumented gloves, position trackers, etc.) [5] .

This work aims at converting the sign language used by verbally handicapped i.e , deaf and/or dumb people to voice or text which can be understood by a normal person using one of the above techniques for obtaining data from the handicapped person .

However, getting the data is only the first step. The second step, that of recognizing the sign or gesture once it has been captured is much more challenging, especially in a continuous stream. In fact currently, this is the focus of the research [5] [10]. This work aims at helping the people with verbal disability to communicate with the real world. The people with these disabilities are usually ignored in the society .In this electronic era; we can overcome these disabilities by this system.

2. Hardware and Methodology Selection

The most important factor we have considered is that the signs corresponding to the 26 English alphabets, which may or may not be closely similar to other symbols, must be efficiently distinguished and detected. There several types of sign languages prevailing in the world. Selection of the sign language which we are going to translate is an important task [5]. The language must be universally accepted, easily understandable to new users and must be properly interfaced.

2.1 Case Study

Several different types of sign languages were analyzed and we came down to two of them. The Indian Sign Language and American Sign Language. Both are universally accepted in their respective areas and are easily understandable. But American Sign Language mostly consists of

the usage of a single hand for showing the alphabets, numbers, and some basic words unlike the Indian Sign Language which uses both the hands for almost all signs [11]. So we selected American Sign Language. The symbols of American Sign Language are shown below.

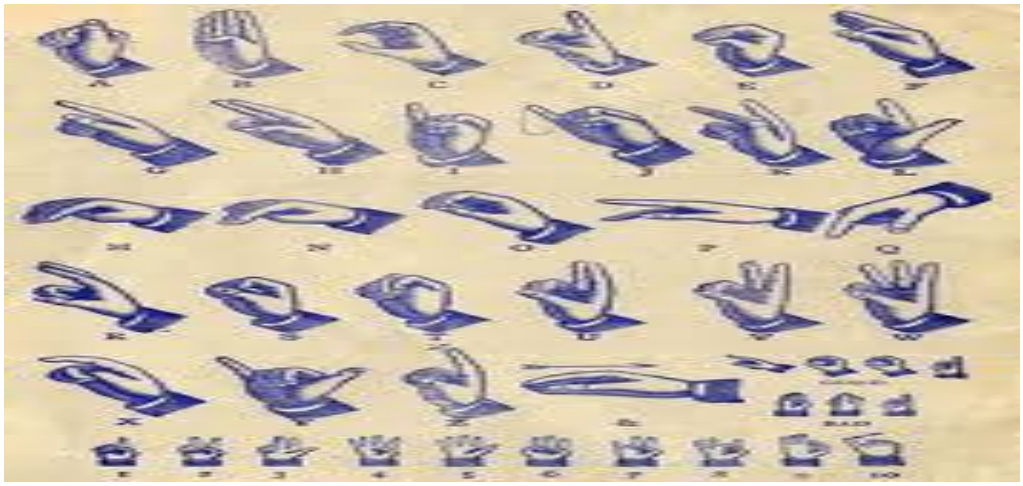

2.2 Data Collection

As the language was selected, we needed information about how to convert each of these symbols to text and voice outputs. Image processing was one of the alternatives [1]. The complexity of the code**,** the difficulty in carrying around a camera etc. made us think about other alternatives. We went through different IEEE papers, talked to some experts and we were told that by using a glove on the user's palm, the difficulty in carrying around something can be minimized. Also, for detecting the bending of the fingers, suggestion was to use a FLEX SENSOR, which is a variable analog resistor which varies according to its bending [7]. To detect the orientation of the palm, the obvious suggestion was using an ACCELEROMETER [7]. To detect the contact between the fingers, we found out a solution to use metal stripes which can be cut from metal cans and can be polished and used. So when these metal stripes come in contact, which will be attached to the fingers, finger contact can be sensed. Our next problem was to decide the output part. As we were concentrating on the simplicity of the system, a text to speech module EMIC2 [14] was suggested by some sites and one of the experts. It was said to be simple, handy and easy to use. So we selected it, connecting it to a small speaker, which can be attached to the glove itself. A provision to connect an LCD was also decided to be setup. The

processing part, considering the large number of inputs, was suggested as ATMEGA16 or ICs with more than 40 pins. But due to the unavailability of the programmer for a 40 pin IC and unavailability of library functions of ICs like PIC series in our programming software, ARDUINO IDE which we selected because of being simple and easy to program, we decided to use two ICs, ATMEGA168 and ATMEGA8.

3. Sign Detection and Processing: Hardware

3.1 Block Diagram

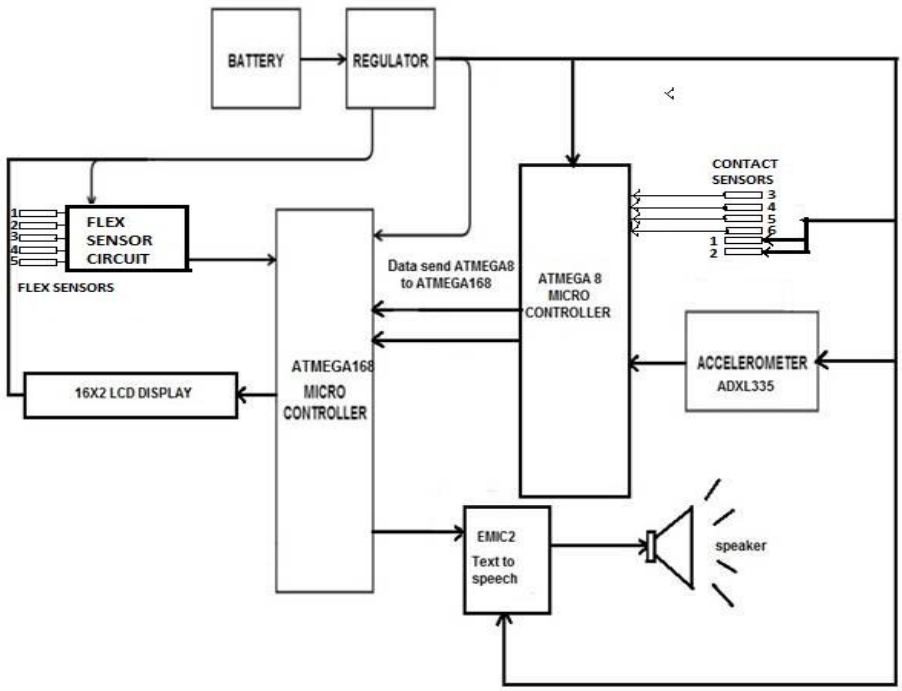

Flex sensors: 1 – Thumb 2 – Index Finger 3 – Middle Finger 4 – Ring Finger 5 – Pinky

Contact Sensors: 1 – Thumb 2 – Index Finger 3 – Middle Finger 4 – Ring Finger 5 – Pinky 6 – Below Pinky

The block diagram can be divided into three sections:-

Detector Part :-

The detector part contains the flex sensors, accelerometers and contact sensors mounted on the glove . The Glove or these sensors in the glove detects the signs shown by the user by the bending of his fingers, spatial movement of the palm, contacts of the fingers etc.

The flex sensors are basically variable resistors. As the flex sensors are bent the resistance will vary in an appropriately linear fashion. In this work flex sensors are the most critical sensors because almost all the letters of the sign language can be distinguished based on finger's flexes [7]. Each fingers are provided with one flex sensor.

An accelerometer is a device that measures proper acceleration. Here we use it to detect the spatial movement of the palm as several signs require palms to be oriented in a particular way [7].

When we consider the sign language, there is only small differences for the signs corresponding to various digits and alphabets which include the contact between the fingers . By sensing the contact between the fingers , the controller can analyze the sign shown [2] . For this purpose, the contact sensor is used .

Processing Part :-

The processor part contains the microcontrollers which processes the outputs from the different sensors and feeds to the output section. Here we are using ATMEGA168 and ATMEGA8 as the microcontrollers. Because the number of analog i/o pins was not enough to accommodate all incoming analog values in ATMEGA168. So we decided to use a low cost additional Microcontroller.

Output Part :-

The output part contains the EMIC 2 module through which we have decided to interface the output side of the system. The module is an efficient text to speech converter and easy to interface. The module is compatible with English and Spanish and it works via serial communication [14]. It has a 3.5mm audio jack to which 8ohm Speakers of lesser size are connected.

3.2 Circuit Diagram

The circuit based on the above discussed block diagram is discussed in this section. Here, main data transfers between the two microcontrollers and to and from the EMIC module is via serial communication. All the systems are provided with 5V supply using a voltage regulator arrangement implemented using IC7805.

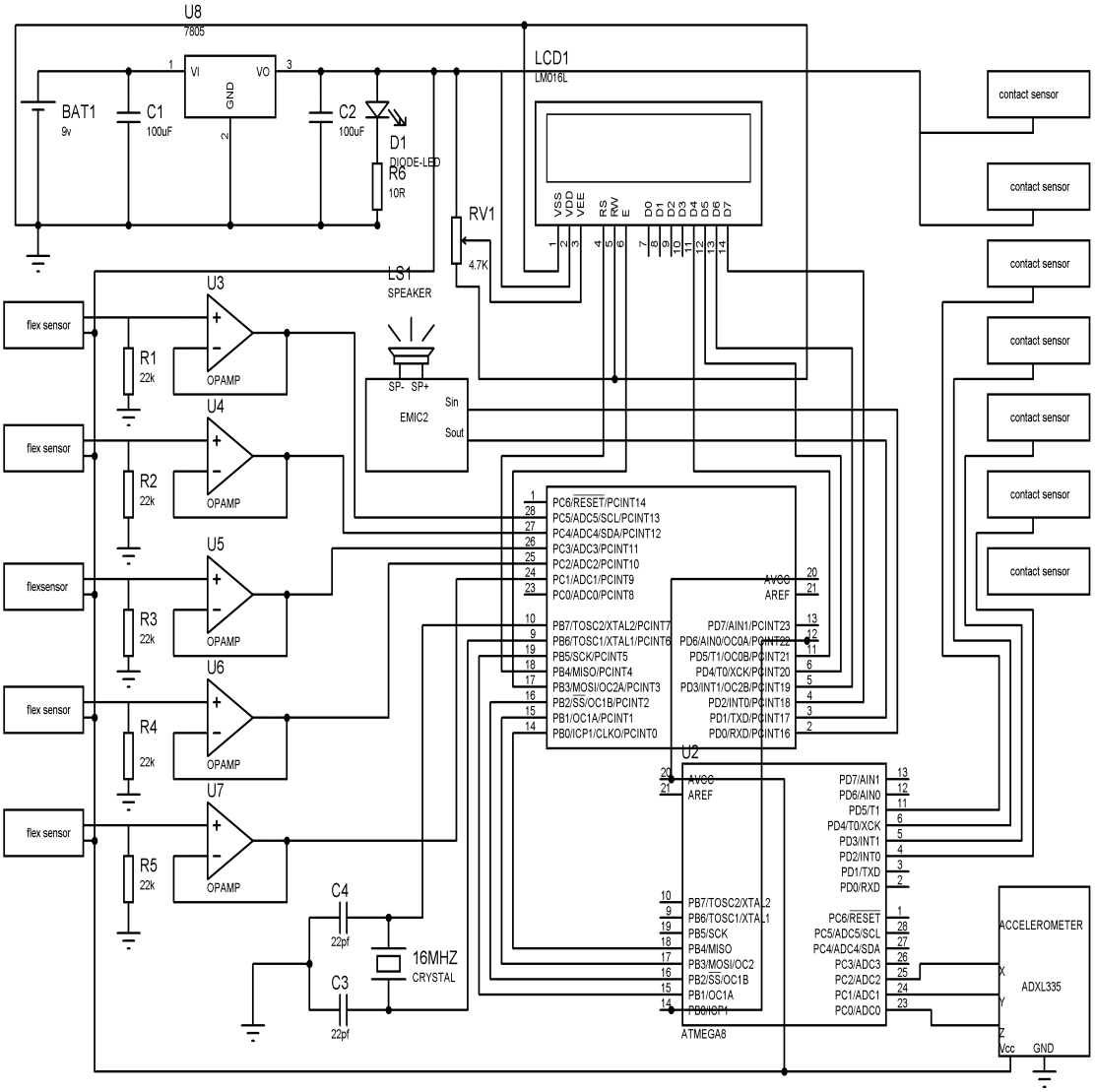

- All the flex sensors are connected to ATMEGA168 using their peripheral circuit which involves IC LM358 Op-amp.
- The contact sensors are connected to ATMEGA8 digital pins.
- The accelerometer lines are also connected to ATMEGA8.
- External crystal is provided to ATMEGA168.
- EMIC2 module is connected to ATMEGA168 through serial communication and also it is connected to the 8Ohm speakers.
- ATMEGA8 sends the data from the contact sensors and accelerometers to the ATMEGA168 for further processing by connecting to its digital pins.

- Supply voltage is provided to each component from the power supply designed using IC 7805.

4. Sign Detection and Processing: Software

The software part mainly comes under the processing section. We have to program the two micro-controllers in order to process different incoming signals from the flex sensors, contact sensors and accelerometers. We get digital high and low values from contact sensors. We use 7 such contact sensors in which 2 of them are provided with supply voltage while the others are connected to the microcontroller. When the any one of the two sensors come in contact with others (according to the symbols), a digital high is sent to the microcontroller [2]. All the other inputs to the microcontrollers are analog voltage values. The programming software we have used here is Arduino IDE. It is just like programming in basic C language and is easy to interface between several systems. Also, a USB-ASP programmer is used in programming the microcontroller.

4.1 Flex Sensor Programming

The outputs of the flex sensor are compared with predefined symbols stored in the microcontroller and the corresponding alphabet shown is detected. A part of the program is shown below:-

```
MY
#include <LiquidCrystal.h>
int FP1 = A1;
int FP2 = A2;
int FP3 = A3;
int FP4 = A4;
int FP5 = A5;
LiquidCrystal lcd(12, 11, 5, 4, 3, 2);
void setup() {
  Serial.begin(9600);
  lcd.begin(16, 2);
}

void loop() {
  int FR1 = analogRead(FP1); //flex senser1 reading
  int FR2 = analogRead(FP2); //flex senser2 reading
  int FR3 = analogRead(FP3); //flex senser3 reading
  int FR4 = analogRead(FP4); //flex senser4 reading
  int FR5 = analogRead(FP5); //flex senser5 reading
  // U and H are connected with acclerometer or change sign.(u will change to 3rd and 4th flex with 2nd position.
  // U changed to "FR3 > 480 && FR3 < 610 && FR4 > 480 && FR4 < 610".
if (FR1 <= 480 && FR2 <= 480 && FR3 <= 480 && FR4 <= 480 && FR5 >= 610 ) {
  lcd.setCursor(0,0);
  lcd.print("A");
} else if (FR1 >= 610 && FR2 >= 610 && FR3 >= 610 && FR4 >= 610 && FR5 > 480 && FR5 < 610 ) {
  lcd.setCursor(0,0);
  lcd.print("B");
} else if (FR1 > 480 && FR1 < 610 && FR2 > 480 && FR2 < 610 && FR3 > 480 && FR3 < 610 && FR4 > 480 && FR4 < 610 && FR5 > 480 && FR5 < 610 ) {
  lcd.setCursor(0,0);
```

4.2 EMIC Module Programming

An EMIC-2 text-to-speech module is used in this system to convert characters in text format to audio format. The data transfer to and from the module is using serial communication. The program for communication with EMIC module is shown below:-

```
emic2 §
#include <SoftwareSerial.h>
#define rxPin 2     // Serial input (connects to Emic 2 SOUT)
#define txPin 3     // Serial output (connects to Emic 2 SIN)
// set up a new serial port
SoftwareSerial emicSerial =  SoftwareSerial(rxPin, txPin);
void setup()  // Set up code called once on start-up
{
 // define pin modes
 pinMode(ledPin, OUTPUT);
 pinMode(rxPin, INPUT);
 pinMode(txPin, OUTPUT);
 pinMode(wakePin, OUTPUT);
 emicSerial.begin(9600);
 delay(10);                          // Short delay
}

void loop()
{
  emicSerial.print("hello");
}
```

4.3 Accelerometer Programming

Accelerometers are provided in order to detect the spatial movement of the palm in the x-y-z directions. Analog voltage values are the outputs which we obtain from the accelerometers. A program for reading accelerometer values is shown below:-

```
acclronew §
#include <LiquidCrystal.h>
// initialize the library with the numbers of the interface pins
LiquidCrystal lcd(12, 11, 5, 4, 3, 2);

// these constants describe the pins. They won't change:
const int xpin = A3;                  // x-axis of the accelerometer
const int ypin = A4;                  // y-axis
const int zpin = A5;                  // z-axis (only on 3-axis mo

void setup()
{
 lcd.begin(16, 2);
}

void loop()
{

 lcd.setCursor(0, 0);
 lcd.print(analogRead(xpin));
 lcd.setCursor(5, 0);
 lcd.print(analogRead(ypin));
 lcd.setCursor(10, 0);
 lcd.print(analogRead(zpin));
 lcd.setCursor(0, 1);
 lcd.print(millis()/1000);
}
```

4.4 Flowcharts

There are two sections as said above. Atmega8 section and Atmega168 section. The flowcharts for both sections' programming are given below.

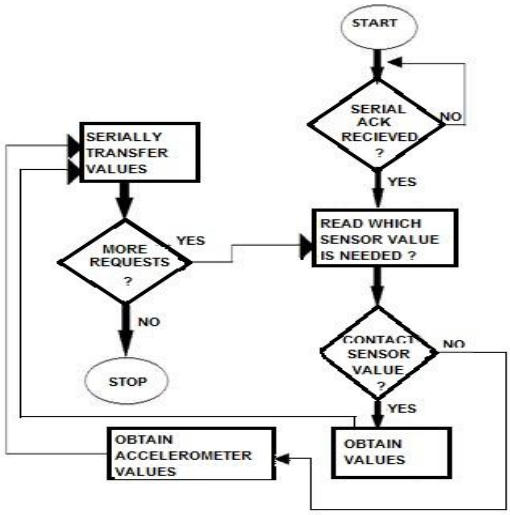

Figure 1 Flowchart for ATMEGA8 Section

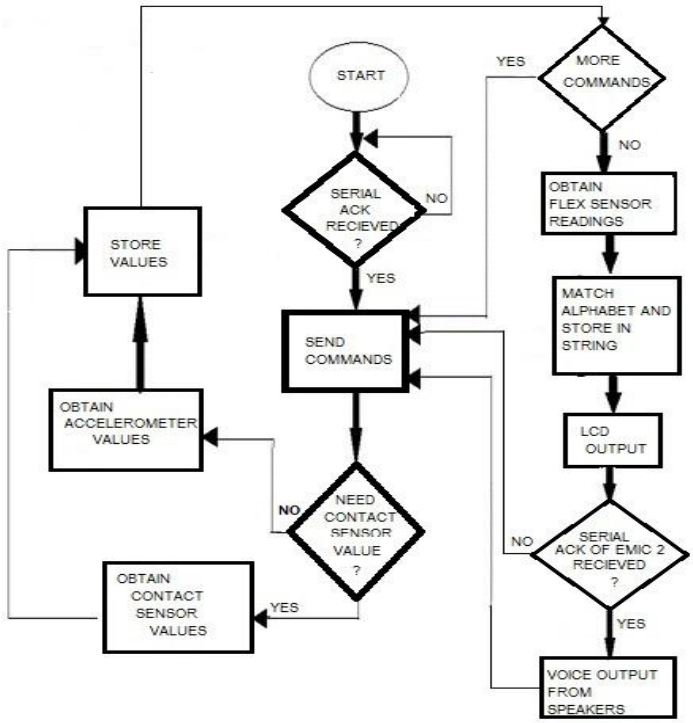

Figure 2 Flowchart For ATMEGA168 Section

5. Results and Discussion

According to the methods we used to design the glove and the strategies adopted in efficient detection of the symbols and their fast processing, the output system had the following specifications

-Supply Voltage : 9V .

_ Operating Voltage : 5V

_ Operating Temperature : -10C to +60C .

_ Total Weight Of Glove :200gms .

_ Total Weight of Processing and output section : 350gms .

_ The system gives output according to 26 English alphabets and 5 basic words (COME HERE,GO,SORRY,HELLO,BYE).

_ Output using EMIC 2 Module in "PerfectPaul" voice connected to speakers through connecting points and availability of a 3.5MM jack to connect with a headset or larger speakers.

_ Output volume of 10Db.

_ Maximum idle time : 1 second.

The efficiency of the system was improved by using a 16 MHz crystal [8], which reduced the idle time i.e. the time between successive signs. The volume of the output was found out to be audible enough for the normal people to understand. By using better speaker systems, the volume of the system could be increased.

Some of the product photos are shown below

Figure 3 the Glove which the User wears ,

Figure 4 Sign Of Letter "L"

Figure 5 Corresponding Letter Displayed On LCD

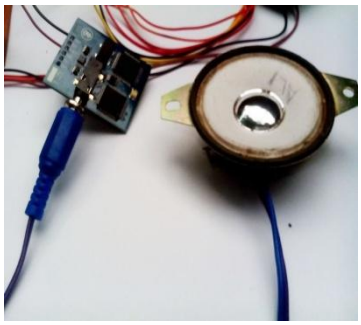

Figure 6 Audio Output Through Speakers

6. Conclusion and suggestions for future work

The prototype of the sign language translator we have developed can be proved as a great communication aid for verbally handicapped people. Although the system is having a vocabulary of 26 alphabets and 5 basic words, more research and further developments of the sign language translator can yield better performing systems capable of translating sentences and paragraphs. The system we have developed is one which is having good future scope and can be a boon to the verbally handicapped human beings to bridge the gap between normal people.

- By using more efficient coding of different signs, vocabulary of the communication aid can be extended.
- By using gloves on both the palms and using more sophisticated microcontrollers etc for processing all these data, gloves capable of aiding day to day conversations can be obtained.
- By using gloves for both the palms, Indian Sign Language can also be accommodated to the system and it can be made universal.
- By interfacing this system with Mobile phone operating systems, more user friendly applications can be created [4].

References

[1]Real-Time American Sign Language Recognition Using Desk and Wearable Computer Based Video; Authors Thad Starner and Alex Pentland Publisher:IEEE Computer Society

[2]Research Lab Method and apparatus for translating hand gestures

Author Hernandez Rebollar

[3]_ L. Baum, "An Inequality and Associated Maximization Technique in Statistical Estimation of Probabilistic Functions of Markov Processes," *Inequalities*, vol. 3, pp. 1-8, 1972.

[4]_ L. Campbell, D. Becker, A. Azarbayejani, A. Bobick, and A. Pentland, "Invariant Features for 3D Gesture Recognition," *Second Int'l Conf. Face and Gesture Recognition*, pp. 157-162, 1996.

[5]_ B. Dorner, "Hand Shape Identification and Tracking for Sign Language Interpretation," *IJCAI Workshop on Looking at People*, 1993.

[6]_ I. Essa, T. Darrell, and A. Pentland, "Tracking Facial Motion," *Proc. Workshop on Motion of Non-Rigid and Articulated Objects*, Austin, Tex., Nov. 1994.

[7] " A hand gesture interface device " Authors: Thomas.G.Zimmerman , Jaron Lanier , Chuck Blanchard, Steve Bryson, Young Harvil *Proceeding*
CHI '87 Proceedings of the SIGCHI/GI Conference on Human Factors in Computing Systems and Graphics Interface
Pages 189-192

[8] J. Hernandez-Rebollar. *A New Instrumented Approach forTranslating the American Sign Language into Sound and Text*. PhD thesis, George Washington University, Washington, DC, August 2003.

[9] Judith Holt, Carol B. Traxler, and Thomas E. Allen. Interpreting the scores: A user's guide to the 9th edition Stanford achievement test for educators of deaf and hard-of-hearing students. *Gallaudet Research Institute Technical Report*, 91(1), 1997. Gallaudet Research Institute.

[10] R. Liang and M. Ouhyoung. A real-time continuous gesture recognition system for sign language. In *Third International Conference on Automatic Face and Gesture Recognition*, pages 558–565, Nara, Japan, 1998.

[11] C. Lucas and C. Valli. *Sign language research: Theoretical issues*, chapter ASL, English, and contact signing, pages 288–307. Gallaudet University Press,Washington DC, 1990.

[12] Ace Sarich. DARPA one-way phrase translation system (PTS). http://www.sarich.com/translator/.

[13] T. Starner, J. Weaver, and A. Pentland. Real-time American Sign Language recognition using desk and wearable computer-based video. *IEEE Trans. Patt. Analy. and Mach. Intell.*, 20(12), December 1998.

[14] "*Towards an unrestricted domain TTS system for African tone languages*" Authors : Moses E. Ekpenyong, Eno-Abasi Urua, Dafydd Gibbon ; International Journal of Speech Technology June 2008, Volume 11, Issue 2, pp 87-96

VEHICLES SIXTH SENSE (AN EMBEDDED APPLICATIONS)

V.Aravindan , Jyothi Esakki

Electronics and Instrumentation Department, SNS College of Technology, Coimbatore, India

aravindvenkat24@gmail.com

jyothiesakki@gmail.com

ABSTRACT

Embedded system is one of the most important applications for the development of new growing technologies in various fields. In this paper we proposed a new idea of auto-vehicle navigation system. In this system the latitude and longitude values of roadways are considered as the basic information. Using these values, the vehicle can be navigated to any required locations using shortest path algorithms namely Dijkistra's algorithm [Data Structures]. These values are send to the input of the microcontroller. Microcontroller is the integrated part of the system which manipulates the information from the inputs such as GPS, RF Receiver, Touch screen modules etc. A separate database is maintained which is an update of Google world map. It divides the earth roadways into separate latitude and longitude values. The movement of the vehicle, direction control and speed control are configured using embedded system [32-bit Microcontroller]. A separate traffic control using RF transmitters is used for this system. By implementing this idea it becomes a user friendly and also for time saving process. We can also implement this idea in ambulance for high speed navigation.

Keywords: Embedded system, GPS, RF Receiver and Transmitter, Microcontroller

INTRODUCTION

An individual database is maintained for each vehicle representing the latitudes and longitudes of the roadways. Microcontroller, the integrated part of the system, manipulate information from the input devices namely GPS, RF receiver and touch screen modules.

The following are the individual blocks of our system.

- GPS module
- Touch Screen (OR) Keypad
- Database
- Ultrasonic sensor
- RF receiver
- Microcontroller
- Direction and Speed Control System (DC motor and Stepper motor)
- Traffic Controller

BLOCK DIAGRAM FOR AUTOMATIC VEHICLE NAVIGATION SYSTEM

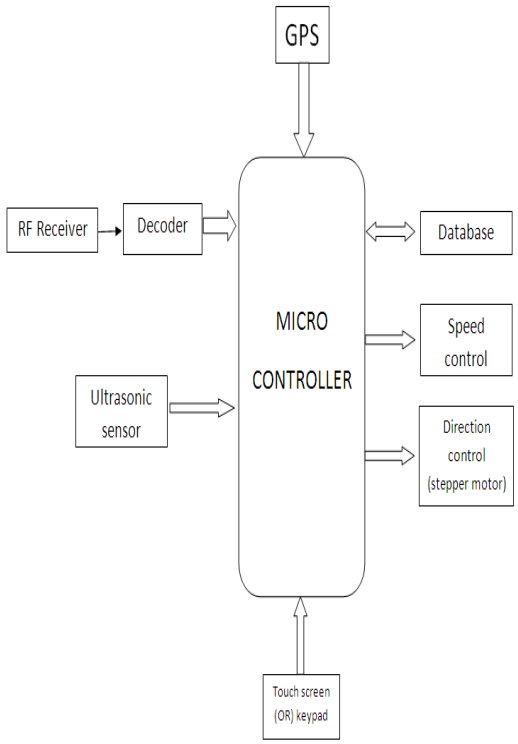

GPS MODULE

The GPS module produces output representing the latitude and longitude values of the vehicle's position. The output of the GPS module is given to the microcontroller. The module is located at the central position of the vehicle.

TOUCH SCREEN (OR) KEYPAD

As an input device, touch screen (or) keypad is used to obtain the place (destination) to be reached. The time limit is also gathered from these devices. For low cost applications, keypad representing the alphabets (or) numbers can be used. The microcontroller gathers the user's entry from these devices.

DATABASE

A separate database is maintained which is an update of Google world map, which divides the earth's roadways into separate latitude and longitude values. Each and every station is named as specific nodes representing their locations. For example, in Tamil Nadu several district towns are presented as nodes namely Tirunelveli, Chennai etc.

As soon as when the microcontroller gathers information from the user by using any shortest path algorithms [Dijkistra's] the route over the roadways are mapped with their respective latitude and longitude values, which are maintained in a separate memory named database. After creating the list of nodes to be travelled, through the latitude-longitude values of the present node and the following nearer nodes are divided into discrete values for the navigation of the vehicle. The database also represents the presence of any speed breakers and signals over the travelling path. From these information's the speed of the vehicles can be controlled.

ULTRASONIC SENSORS

To examine the presence of the nearer vehicles the ultrasonic sensors are fixed around the vehicle. The ultrasonic sensor produces proportional voltage with respect to the obstacles or vehicles present in and around. It is a trans-receiver which transmits signal of frequency 40 kHz and by using the receiving signal a voltage is produced proportional to the distance of the

obstacle. When the obstacles are very nearer it produces HIGH output voltage and vice versa. The output of the sensors is given to the A/D converter of the microcontroller. From the data obtained from ultrasonic sensors the lane shift over the roadway can be made and speed is controlled.

RF RECEIVER

To provide speed limit over a region of distance, separate signal transmitters of a prescribed global frequency are used. The RF receiver, in the vehicle decodes the signal and provides the necessary speed control signal to the vehicle. By adjusting the power of the RF transmitter the range of distance covered can be varied.

MICROCONTROLLER

Any 32-bit microcontroller with A/D converters, I/O ports, 4-bit port change interrupts, Internal and external timers, USART and extendable memory can be used to provide control for our navigation system.

- As explained the A/D converters are used to convert the analog data values from the ultrasonic sensors to digital form.
- The 4-bit port change interrupts are used to get separate input values from the keypad.
- The timers are used for speed control of the vehicle. External timer (Speed and Direction Control) and Internal Timers
- The Universal Synchronou Asynchronous transmitter and Receiver is used for communication with the GPS module, which gives latitude and longitude values.
- The I/O ports are used to receive the RF signal through the decoder and for other peripheral purposes.
- The Interrupts are used for speed control of the vehicle or any other abrupt changes.

The information obtained from the GPS module is compared with the values in our database. The vehicles is tracked (or navigated) through the latitude and longitude values over the road ways. To prevent collision (or) other disasters the ultrasonic sensors are used.

SPEED AND DIRECTION CONTROL

Depending on the user's time requirement to reach the destiny, the speed of the vehicle is controlled with some intellectual control voltage to the D.C. motors attached to the wheels of the vehicles.

In cases of determining any speed breakers (information stored in Database), or any other obstacles the speed is controlled by applying a proportional voltage to this D.C. motors. While examining over direction control, the lane conversion, road turn situation, etc. are determined and the vehicle direction of flow is controlled by applying proper control voltage to the stepper motors connected.

TRAFFIC CONTROLLER

Here is an intro for an intellectual traffic controller. Each side is provided with highly directional RF transmitters. The encoded information represents the signal indicating green, red or yellow. A separate microcontroller network controlling these signals also provided.

The individual receiver section in the vehicle responds to the signal from this traffic controller network.

RF CODE FORMAT

Yellow	Zebra Crossing	Unimplemented	Bit indicating ON state
0	0	X	1

Green			Red
Left	Straight	Right	
1	1	1	0

TRAFFIC CONTROLLER

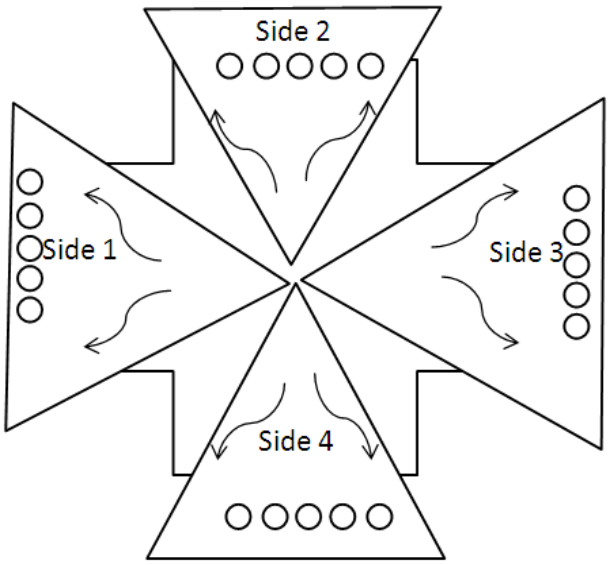

MODULE

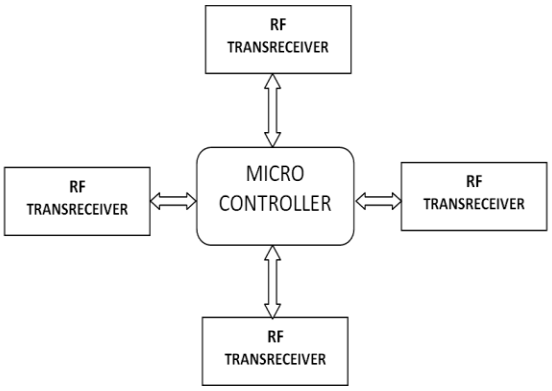

OTHER SPECIAL FEATURES

For special requirements such as for ambulance navigation etc., an individual transmitter is provided for such vehicle which transmits an emergency code. The traffic controller always tracks for such signals and during their presence the particular lane can be cleared quickly.

ADVANTAGES

- Automatic tracking facility.
- User friendly vehicle navigation system
- Time saving process (User is free for any work)
- Speed limit controller
- High Speed Navigation for ambulance can be made

DISADVANTAGES

- Costlier comparing to driver's pay
- Presence of dig or any damage of roadways should be avoided.
- Large Memory storage requirements
- Periodical update to the database should be provided.

CONCLUSION

Thus over a system, leads a path of automatic navigation system for vehicles .even though it is costlier, it provides us highly productively and timely journey by obeying our traffic rules.

PROGRAM

```
Void Dijkstra(Graph G, Table T)
{
        Int I;
Vertex V, W;
Read Graph (G, T); /*Read Graph from adjacency list*/
For (i=0;i<Numvertex;i++)
{
        T[i].known=False;
        T[i].Dist=Infinity;
        T[i].path= Not vertex;
}
```

```
        T[start].dist=0;
For (;;)
{
        V= Smallest unknown distance vertex;
        If (V==notA vertex)
                Break;
        T[V].known=True;
        For each W adjacent to V
                If (!T[W].known)
                {
                T [W].Dist= Min [T [W].Dist, T [V].Dist + C_vW
                T [W].path =v;
                }}}
```

REFERENCES

[1] Kalle.J.Palomaki, Guy Brown, "*vehicle sensing*". IEEE Transactions on vehicles, Jan'2002.

[2] M.P. Cooke, P.D. Green, L. Josifovski and A. Vizinho "*Robust automatic vehicles* "

[3] Embedded systems design: An introduction to processor, tools and techniques ByArnold.s.Berger

[4] Embedded systems ApplicationBy Claude Baron, Jean Claude Geoffrey, Gilles Motel

BLOOD DONOR FINDER

Lakshmi Siva Sankar,Indhulekha K.J, Sajina Azeez,Suhila V.M

S7 CSE,K.M.E.A College of Engineering, Kuzhivelipady, Edathala P.O., Aluva,, Kochi, India 683561

cpslakshmi94@gmail.com

Ms. Sandhya K.R

Assoc.Professor, CSE Dept,

K.M.E.A. College of Engineering,Kuzhivelipady, Edathala P.O., Aluva,, Kochi, India 683561

SANDHYAKR@KMEA

Abstract

Blood is the living fluid that all life is based on. Blood is composed of 60% liquid part and 40% solid part. As you know blood cannot be harvested it can only be donated. Every year India requires 40 million units of 250cc blood out of which only a meager 500,000 of blood units are available. Despite the increase in the number of donors, blood remains in short supply during emergencies, mainly attributed to the lack of information and accessibility. The current technology existing in many hospitals in case of handling emergency for blood is by maintaining details about some donors registered under that hospital and contact each of them at the time of emergency. But it is inefficient under the scenario that the donors registered under one hospital might not registered under another hospital. Most of the time it is the responsibility of the patient's relatives to arrange the blood. The website Blood donor finder is an attempt to overcome the anomalies in the present trend of finding a blood donor. It maintains and manipulates database of the donors and hospitals registered in the site using database management system (DBMS). The donors to be alerted through an e-mail are sorted by the site on the basis of their last donation date and blood group. The urgent requests given to the site involve finding a suitable donor within 10 km from the location specified by the requestor using the global positioning system (GPS) technology. Thus the website aims at narrowing gap between blood donors and seekers.

Key words: Database management system, Global Positioning System.

1. Introduction

In any hospital there can occur emergency for blood at any time. So in every hospital they are supposed to keep a list of donors of every blood group. But it is inefficient under the scenario that the donors registered under one hospital might not be registered under another hospital

.Thus to make all donors available for all hospitals a globalization is required in this field. This project globalizes the field of blood bank management systemby developing a web based portal to facilitate the co-ordination between supply and demand of blood. It actively encourage voluntary blood donation and maintain a well indexed record of blood donors, and educate the community on the benefits of blood donation.

2. System Analysis

Analysis is the activity that feeds information to the specification activity, it is essential that during analysis, a complete and consistent set of specifications emerges for the system [3]. For achieving this, the major problem is to obtain the necessary information. The second major problem of analysis is how to organize the information obtained so that it can be effectively evaluated for completeness and consistency. The third major problem during analysis is resolving the contradictions that may exist in the information from different parties, Fourth major problem is avoiding internal design. The basic principle used in the analysis is divide and conquer. That is partition the problem into sub problems and then tries to understand each sub problem and its relationship to other sub problems in an effort to understand the total problem.

3. System Design

Design is essentially the bridge between the requirements specification and the final solution for satisfying the requirements. The goal of the design process is to produce a model or representation of a system, which can be used later to build that system. The produced model is called the design of the system. The design process for the software system often has two levels. At first level, focus is on deciding which modules are needed for the system, the specification of these modules, and how the modules should be interconnected. This is what is called the system design or to level design. In the second level, the internal design of the modules, or how the specification of the module can be satisfied is decided. This design level is often called detailed design or logic design. A design can be object oriented or function oriented. In the function oriented design, the design consists of module definitions, with each module supporting a functional abstraction. In object oriented design, the modules in the design represents data abstraction.

DATA FLOW DIAGRAM: A dataflow diagram (DFD) is a diagram that describes the flow of data and processes that change or transform data throughout a system. It is a structured

analysis and design tool that can be used for flowcharting in place of, or in association with, information oriented and process oriented system flowcharts. When analysis prepares the DFD, they specify the user needs at a level of detail that virtually determines the information flow into and out of the system and the required data resources. This network is constructed by using a set of symbols that do not imply a physical implementation. The DFD reviews the current physical system, prepare input and output specification, and specifies the implementation plan.

3. 1Detailed Design

Detailed design starts after the system design phase is completed and the system has been certified through a review. The goal of this phase is to develop the internal logic of each module identified during the system design.

3.2. Program Design

The first task that was analyzing the needs of the work is dividing it into different modules. The three main users of the proposed work are the administrator, donor and hospital.

1. Administrator

The administrator manages the accessibility of both hospital and donor. The profile of administrator facilitates to view the complete information of both hospitals and donors. This is done by accessing our database named “db”, where separate tables are designed to store information of donors (figure d1) and hospitals (figure d2). The admin can accept or reject the hospital and the donor. Only approved donor and hospital can enter into the site. The figure(1) depicts working of administration module using a DFD.

FIELD NAME	FIELD DESCRIPTION	DATA TYPE	FIELD SPECIFICATION
u_name	Username	Varchar(20)	
u_pass	Password	Varchar(20)	
dname	Name of donor	Varchar(20)	
Bgp	Blood group	Varchar(20)	
Ldd	Last donation date	Date	
Dob	Date of birth	Date	
Height	Height	int	
Weight	Weight	int	

Gender	Gender	Varchar(20)	
Pno	Phone number	longint	Primary key
City	City name	Varchar(20)	
District	District name	Varchar(20)	
state	State where donor resides	Varchar(20)	
Mail id	Email address	Varchar(20)	
status	Status	Varchar(20)	

Figure d1:Donor database

FIELD NAME	FIELD DESCRIPTION	DATA TYPE	FIELD SPECIFICATION
u_name	Username	Varchar(20)	
u_pass	Password	Varchar(20)	
H_name	Hospital name	Varchar(20)	
Pno	Phone number	Long int	Primary key
City	City name	Varchar(20)	
District	District name	Varchar(20)	
State	State where hospital resides	Varchar(20)	
Mail id	Email id	Varchar(20)	
Status	Status	Varchar(20)	

Figure d2:Hospital database

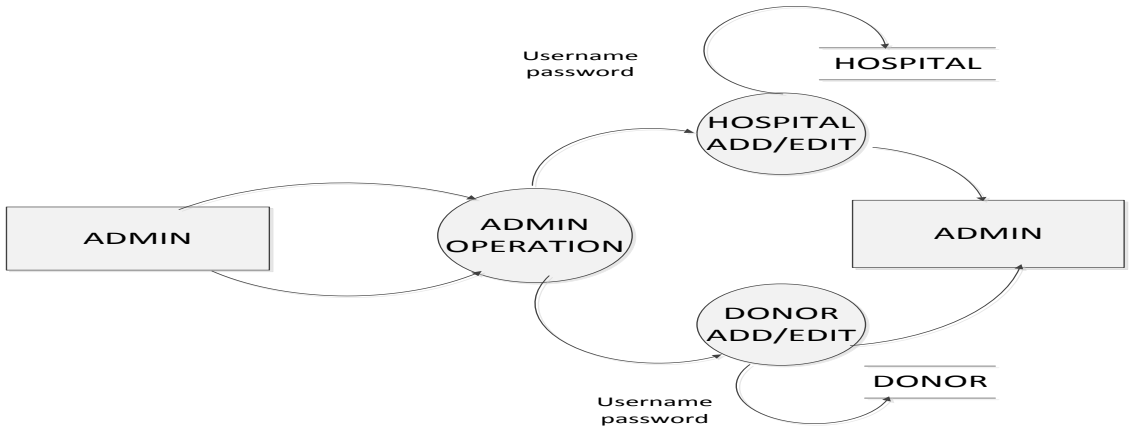

Figure (2) DFD of Administrator

2. Donor

The donor profile provides the donor with option to modify any of the details he/she has provided earlier during registration. The donor can also check the record of all the request that he has received till date from "Request Record".

3. Hospital

The profile for the hospital allows it to do the following functions:

3.1Register a Patient

Patients are registered by the hospital staffs. Only then they can easily request for blood when in need. During registration the staff should enter the details about the donor into a database as shown in figure d3.

FIELD NAME	FIELD DESCRIPTION	DATA TYPE	FIELD SPECIFICATION
Pid	Patient id	int	Primary key
Pname	Patient name	Varchar(20)	
Pgender	Patient gender	Varchar(20)	
Pdob	Date of birth	Date	
Ppno	Phone number	Long int	
Pbg	Blood group of patient	Varchar(20)	
Pdisease	Patient disease	Varchar(20)	
Pheight	Height	int	
Pweight	Weight	int	
Pcity	City name	Varchar(20)	
Pdistrict	District name	Varchar(20)	
Pstate	State where patient resides	Varchar(20)	
hospname	Hospital name	Varchar(20)	

Figure d3: Patient database

3.2View Patient Details

Records are maintained in the patient table in our database "db" and can be checked whenever required by the hospital management or staff.

3.3Request for Blood

It is through the hospital's profile, their patients can request for blood at time of emergency. Necessary information's are asked and collected during registration of request and stored in database as shown in figure d4, and all the donors registered here who are eligible are sent e-mails.Also unregistered individual can also request for blood and matching donor within 10 km of specified location is found using GPS.

FIELD NAME	FIELD DESCRIPTION	DATA TYPE	FIELD SPECIFICATION
pname	Patient name	Varchar(20)	
pid	Patient id	int	Foreign key
dname1	Name of donor	Varchar(20)	
pblood	Patient blood group	Varchar(20)	
Regdate	Registration date	Date	
Reqdate	Required date	Date	
Msg	Message	Varchar(20)	
District	District name	Varchar(20)	
Hname1	Hospital name	Varchar(20)	

Figure d4: Request database

3.4 View Request Records

All the requests that are processed by the hospital till date can be viewed by accessing them from the database.The figure(2) depicts the working of hospital module.

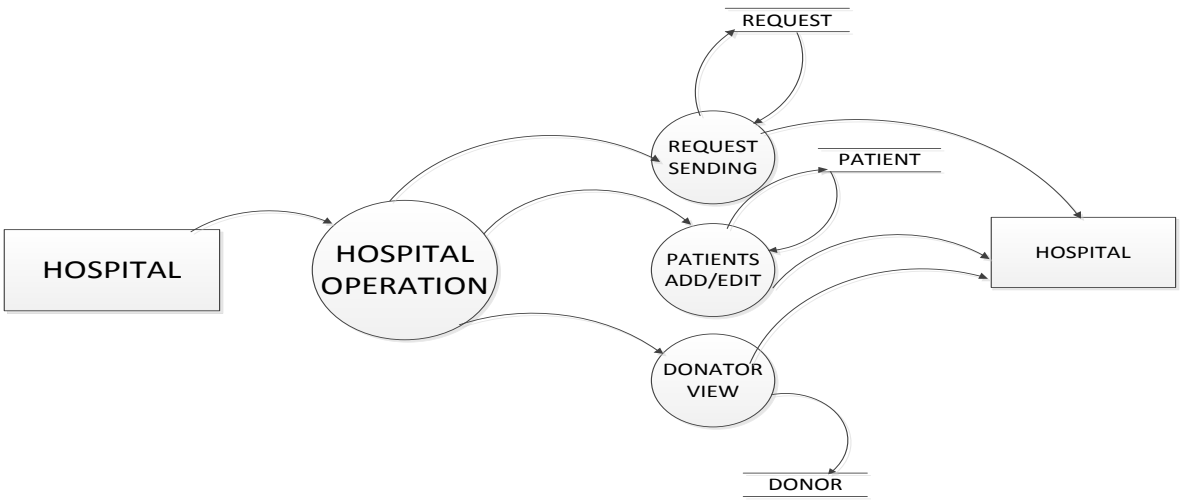

Figure(2)DFD of hospital

4. Registration

In this module the donor and hospital can register in the site by giving their details.They are then supposed to wait for the approval of the administrator to use the username and passwordopted by them during the registration for logging into their profiles.The details will be inserted into the database. Later the donor and the hospital can update their details.The figure (3) shows the DFD to depict the login of users.

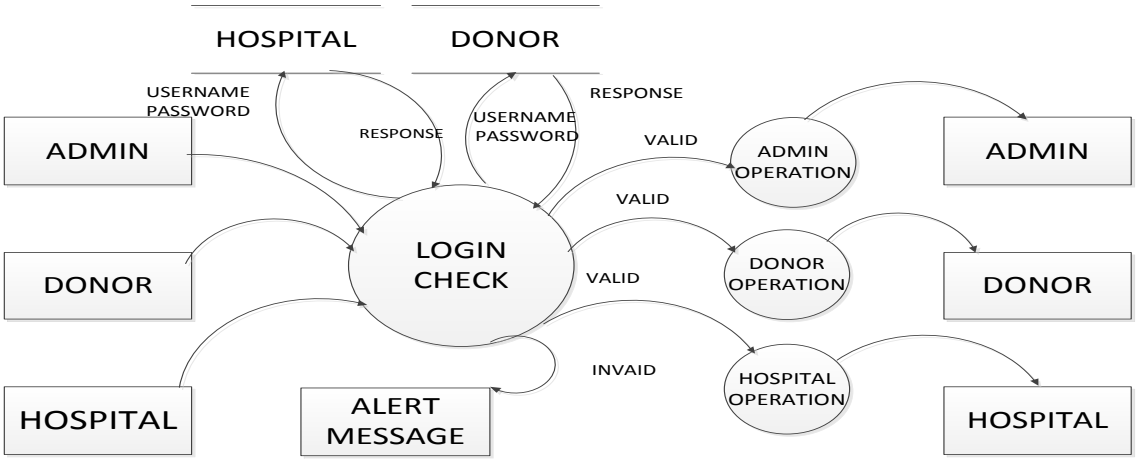

Figure (3) DFD of Login

5. Alert

5.1 Hospitals are alerted

Whenever an emergency occur at hospital the patients can alert the hospital administrators and the on behalf of the patients can post their request on the site.

5.2 Donors are alerted

The site will sort the matching donor list according to their last donation date and sends request to them. When those unregistered patients request, only few of those people who are nearest to the hospital are alerted along with hospital's emergency contact no.

3.3 Architectural Design

Architectural design represents the structure of data and program components that are required to build a computer based system. Architectural design begins with data design and then proceeds to the derivation of one or more representation of the architectural structure of the system.In addition component properties and relationships are described.

3.4 Interface Design

The user interface design creates an effective communication medium between a human and a computer. A software engineer design the user interface by applying an iterative process that draws on predefined design principles. Screen design encompasses both input and output form. A template of the form is displayed on the screen with labeled field and space for data entry. A form is a tool with a message and act as physical carrier of data or information. Each form will have its own purpose.

3.5 Procedural Design

The procedural design establishes the algorithmic detail required to manipulate data structures, effect communication between software components via their interface, and implement the processing algorithms allocated to each component. The component level design represents software in a way thatallows you to review the details of the design for correctness and consistency with earlier design representations. It provides a mean for accessing whether data structures interface and algorithm will work. Pseudo code is used for procedural design.

3.6 Database Design

A database is a collection of interrelated data stored with minimum redundancy to serve many users quickly and effectively [2]. The general objective is to make database access easy, quick, inexpensive and flexible for the user. Relationships are established between the data item and unnecessary data items are removed. SQL database has been chosen for developing the relevant database. Figures d1,d3,d3 and d4 are some of the important databases used in Blood Donor Finder.

JAVA SERVER PAGES (JSP): Java server pages is use to create web content even easier, java has introduced java server pages[2]. While to write servlets can require some pretty extensive knowledge of java, a newbie to java can learn how to do some pretty neat things with JSP's in a hurry Servlets provide a component-based, platform-independent method for building web application. Multiple user request can be threaded through the same instance of a servlet. A servlet is mapped to one or more uniform resource locations (URLs), and when the server receives a request to one of the servlet URLs, the service method in the servlet is invoked and it responds.

HYPER TEXT MARKUP LANGUAGE (HTML): The key to publishing on the web is having a firm understanding of hypertext mark-up language (HTML)[2].Using a hypertext link to move from one place to another is one of the most common activities on the World Wide Web. In fact, hypertext links are the very essence of the web. HTML isn't the only way to present information on the web, but it's the glue that holds everything together. For all its simplicity, HTML is a very powerful language. Text, images, multimedia, and other files can all be packaged together

Java Script: Java script is a scripting language used in many websites. A scripting language is interpreted in run time. It is not compiled like other languages as C++, C#, VB.NET etc. Java script is a client side language and it runs on the client browser. Netscape developed it and because of its simplicity it is one of the most known scripting language. However, Java script can be also used on the server side.

Apache Tomcat Server: Apache tomcat is a web container, or application server developed at the Apache software .Tomcat implements the Java servlet and the java server pages (JSP) specification from sun micro systems, providing an environment for java code to run in cooperation with a web server. It adds tools for configuration and management but also can be configured by editing configuration file that are normally XML-formatted. Tomcat includes its own internal HTTP server.

Back-End specifications:

Microsoft SQL Server is a relational database management system developed by Microsoft. whose primary function is to store and retrieve data as requested by other software applications, be it those on the same computer or those running on another computer across a network (including the Internet). Its primary query languages are T-SQL and ANSI SQL. SQL Server 2005: SQL Server 2005 (formerly codenamed "Yukon") released in October 2005. It included native support for managing XML data, in addition to relational data. For this purpose, it defined an xml data type that could be used either as a data type in database columns or as literals in queries.

4. Implementation

The implementation and maintenance is the penultimate phase of software development life cycle. Before testing is performed, the system is implemented in the client's computer.Here is the most important part, that is user training. The working of the system is explained to the

user. The main objective of this part is that the user will be able to understand the different process. Only the external working is explained to the user and not the internal logic. Then check to see whether the implemented system satisfies the user's various needs.

5. System Testing

System testing is the stage of implementation, which is aimed at ensuring that the system works accurately and efficiently before live operation commences. Testing is the process of executing the program with the intent of finding errors and missing operations and also a complete verification to determine whether the objectives are met and the user requirements are satisfied [2]. The ultimate aim is quality assurance. System testing is defined as the process by which one detects the defect in the software. Any software development organization or team has to perform the process of testing to ensure customer satisfaction.

6. Conclusion

Blood is universally recognized at the most precious element. We positively believe this tool can overcome most of this challenges by effectively connecting regular donors with the blood recipients.This project taught us basics of java programming, html and how to deal with challenges and risks. This project taught us the value of hard-work in making the project success. Also we have realized the meaning of the proverb "United we stand , divided we fall" , the project we have today is the result of effective team work. Through this project we understood the value and importance of blood donation. We are proud to say that through this project we have attempted to find a solution to a social cause and save many lives.

REFERENCES

[1] Udit Agarwal, "Software Engineering" first edition January, 2012

[2] Herbert Schildit, "The complete reference java J2SE" 5th edition, Tata McGraw Hill New Delhi, 2010

[3] Roger s. Pressman, "Software Engineering, a practitioner's Approach, sixth edition, McGraw-Hill international edition

[4] https://www.bharathbloodbank.com

[5] https://www.friends2support.org

Testing and Calibration of Instruments - A review

Meera Viswanadh[1], Shreyas Prakash[2]

IV Semester BTech., Department of ICE, NIT Trichy

[1]meera.viswanadh@gmail.com, [2]shreyas314159@gmail.com

Abstract

Measurement is vital in science, industry and commerce. Accuracy and reliability of all such measurements would be doubtful if the instruments used were not calibrated. Calibration of a measuring instrument ensures that the value displayed by the instrument is both accurate and repeatable with respect to a traceable standard. A review of environmental qualification tests, testing of flow meters , calibration of Physical Standards, and calibration of some of the instruments like water meters, flow meters, Hygrometers, and Psychrometers have been reviewed in this paper.

Key words: ***Calibration, Testing, Instruments, Flow meter***

1. Introduction

Measurement is vital in science, industry and commerce. Measurement is also performed extensively in our daily life. The measuring instrument is the most important part of the measurement process and the selection of the instrument therefore has to be done carefully [1]. If the selection is not correct, the result of the measurement may give a wrong indication, thereby leading to an incorrect decision. The following sections review the testing and calibration of some of the instruments used in industries.

2. Calibration of instruments

The selection of measuring instruments depends on the measurement to be performed. Generally, three characteristics are considered [2]; these are:

- The range and magnitude of the parameter to be measured and the accuracy of the measurement (the instrument should have the range to cover effectively the range of the parameter).

- The resolution of the measuring instrument should be smaller than the minimum unit of measurement of the parameter.
- Lastly, and most importantly, the accuracy or uncertainty of the measuring instrument should comply with the accuracy requirement of the parameter to be measured.

Accuracy and reliability of all such measurements would be doubtful if the instruments used were not calibrated. Calibration ensures that a measuring instrument displays an accurate and reliable value of the quantity being measured [3]. Thus, calibration is an essential activity in any measurement process.

According to the International Organization for Standardization publication entitled International Vocabulary of Basic and General Terms in Metrology (published in 1993 and known as VIM), calibration is the set of operations that establish, under specified conditions, the relationship between values indicated by a measuring instrument, a measuring system or values represented by a material measure, and the corresponding known values of a measurand. Calibration of a measuring instrument ensures that the value displayed by the instrument is both accurate and repeatable with respect to a traceable standard.

2.1.Test of water meters

Routine test of water meters include hydrostatic pressure test, accuracy tests at different flow rates and pressure loss tests. Endurance test routine include test before and after prolonged flow conditions - discontinuous and continuous- as specified by standards. Tests can be specified in different water meter standards like IS, ISO, EEC, OIML etc.

2.2.Tests of pipes

Hydrostatic pressure tests of pipes can be conducted on samples obtained from a supplied lot before laying pipes in any water supply schemes[5]. Roughness or C-value of pipes after long period of service in the distribution system can also be determined. (C-value: = an efficiency correction factor which takes into account the fall off in efficiency when the pump is not operating at its exact “specific speed”).

Procedure: Water which is coming from the reservoir is first passed through the reference meter. The reference meters normally used are EM Flow meter and the Ultrasonic flow meter. Depending on the flow rate, the incident flow is diverted into the respective channel of specified diameter while the other channels are closed using butterfly valves. This flow is then made to pass through the test meter which has been given for calibration. The flow is made to go upstream using the centrifugal pump. To nullify the air gap, gooseneck arrangement can be used. The flow is then made to go downstream into the collection tank which is kept on the weighing balance which is used to obtain mass. To get the time taken to fill the tank to a specified level, a counter can be kept in the channel. From the values of weighing balance and counter we get Mass flow rate which is a primary standard. If the obtained Mass flow rate is divided by density which we get from the densitometer, we get the Volume flow rate.

2.3.Calibration of flow meters

As per the norms stipulated by the International Standards Organisation (ISO) for standard atmospheres for conditioning, ambient is maintained at a temperature of 20 +/- 0.5^{o}C and at relative humidity of 55 +/- 5% through an air conditioning system operated continuously.

Primary Standard: Calibration is done using two systems, Bell prover and the Piston prover depending upon its flow rate. The piston is ejected upwards using the air from the blower which is then made to free fall and the displacement is measured using the scale. This gives the volumetric flow rate. The output from the cylinder is given to the test meter and the test meter reading and the measured reading is compared.

Secondary Standard: Air which is coming from the blower is first passed through the test meter. Depending on the flow rate, the incident flow is diverted into the respective channel of specified diameter while the other channels are closed using butterfly valves. This flow is then made to pass through the filter and it is then diverted to a specific channel based on its flow rate. It is then made to pass through the Sonic nozzle and the Butterfly valve and then to the blower. The test meter reading is compared with the value obtained using the Sonic nozzle and is hence calibrated.

2.4. Electro-technical Calibration:

Electro-technical Calibration involves Calibration parameters like Current, Resistance, Capacitance, Frequency, and Time. It is based on specific work procedures. The standard procedures are formulated with International Standards.

***Thermal Calibration*:** Small temperature ranges of various thermo couples can be calibrated using dry block calibrators (-40 to 72^0 C). Large temperature ranges can be calibrated using fixed point cells. Temperature calibrations are done using fixed point cells. These cells have temperatures ranging from -50^0 C to 1000^0 C.

***Humidity Calibration*:** Humidity generator is used as the standard for the calibration. Hygrometers and Dual type hygrometers - Psychrometers are calibrated using this standard.

Hygrometer: It is an instrument used for measuring the moisture content in the atmosphere. Humidity measurement instruments usually rely on measurements of some other quantity such as temperature, pressure, mass or a mechanical or electrical change in a substance as moisture is absorbed. By calibration and calculation, these measured quantities can lead to a measurement of humidity. Modern electronic devices use temperature of condensation, or changes in electrical capacitance or resistance to measure humidity differences.

Psychrometer: A psychrometer consists of two thermometers, one which is dry and one which is kept moist with distilled water on a sock or wick. The two thermometers are thus called the dry-bulb and the wet-bulb. At temperatures above the freezing point of water, evaporation of water from the wick lowers the temperature, so that the wet-bulb thermometer usually shows a lower temperature than that of the dry-bulb thermometer. When the air temperature is below freezing, however, the wet-bulb is covered with a thin coating of ice and may be warmer than the dry bulb.

Relative humidity is computed from the ambient temperature as shown by the dry-bulb thermometer and the difference in temperatures as shown by the wet-bulb and dry-bulb thermometers. Relative humidity can also be determined by locating the intersection of the wet and dry-bulb temperatures on a psychrometric chart. The two thermometers coincide when the air is fully saturated, and the greater the difference the drier the air. Psychrometers are commonly

used in meteorology, and in the HVAC industry for proper refrigerant charging of residential and commercial air conditioning systems.

2.5. Environmental qualification tests

In this category, behavior of the system with environmental conditions such as Vibration, Water, Noise and Dust are being tested.

Vibration test: The vibration of an object is always caused by an excitation force. This force may be externally applied or originated inside the object. The knowledge of their characteristics allows us to diagnose the machine problem. Here, vibration is applied to test the body by shaker mechanism and the resonance condition is determined.

Spray Water test: In this test the test object is placed on a working table and water is sprayed on the object through the nozzles placed around the work table. The resistance of the object against the water is tested.

Dust test: In the dust test, the test object is placed in a chamber. Fine dust particles (Talcum powder) are allowed to enter the chamber and are uniformly circulated inside the chamber using a fan provided below the chamber. The dust test can be used to check the dust resistance of cellular devices and so on.

Noise test: Noise test can be conducted in a hemi un-echoed chamber. This chamber obstructs echo thus avoids rerecording and also external disturbances. Here, noise production of various equipments like AC vents of automobiles and valves etc can be tested. The decibel level is maintained at 0 decibels so that there is perfect isolation from the external noise.

2.6. Flow meters test

Oil Flow testing: Usually the principle flow medium is EXXSOL D80 (A de-aromatized hydrocarbon fluid with IBP at 208 deg C and DP at 236). It is an aviation fuel with a high flash point. Maximum flow attainable is 700m^3/hr. The flow meter to be calibrated will be assembled in the test line which is flooded by oil and the entrapped air is cleared through the air bleed. In gravimetric system of calibration, the net mass of oil will be collected and the air buoyancy

correction is done. The volume is calculated by taking density at that temperature and is compared with the indicated reading of the meter.

Water Flow testing: Products covered include all types of flow meters, valves, water meters, pumps, water conveyance pipes and fire fighting equipments. The water flow testing works on gravimetric static method. This method is as per ISO 4185 and here the flow meter is calibrated to the highest accuracy by weighing the quantity of water that passes through the meter during the known time interval. The mass measurement is done by using Load cells which are secondary transducers that are used to convert force into electrical signals using strain gauges for indirect conversion. The relative density together with water temperature at each diversion enables the mass reading after the correction for air buoyancy to be converted into volume. These volumes are divided by respective diversion times in order to obtain accurate measurement of flow rate.

The flow meters are calibrated against a secondary standard which is turbine flow meter. The lines are controlled by butterfly valves and the temperature inside the flow line is determined by RTD. Important flow products which can be calibrated by this test include Ultrasonic flow meter, all types of Insertion flow meters, Orifice plates, Mass flow meters and all types of Valves. Primary gravimetric system is used to calibrate flow meter up to $50m^3$/hr. Gravimetric system consists of a weighing system to measure the Mass and time taken to reach a certain level and from which the Volumetric flow is calculated.

2.7. Physical Standards calibration

Primary standards of length, mass, time, temperature, pressure/vacuum, volume, relative humidity and hardness are to be calibrated. These calibrations are operated under controlled environmental condition of temperature 20 +/- 1^0 C and humidity 50 +/- 15%. In the length calibration bay, the distance between the different points in the wire mesh is measured using pressure wire gauges. Here, slip gauge can be used as the primary standard for length calibration.

2.8. Compressed natural gas calibration

Here, the performance testing of check valve, relief valves, filters, fuel pipelines can be carried out. Flow and fuel characteristics of CNG dispenser can be checked as per OI ML R139 2007. The lab carries out accuracy testing using existing installation setup using master meter method.

3. Periodicity of calibration

Periodicity of calibration generally would be finalized based on recorded investigation. This means that calibration results of an instrument must be monitored over time and, depending on the drift it exhibits, the time period between recalibration can be decided [4]. The initial decision to determine the calibration interval is based on the following factors:

• Recommendation of the instrument manufacturer;
• How frequently and severely the instrument is expected to be used;
• The influence of the environment;
• Maximum allowable variation of the measurand;
• The uncertainty of measurement required.

However, clearly there cannot be one universal method of determining the calibration periodicity for all types of measuring instruments. As a rule of thumb, to start with the following periodicity could be considered:

Details of instrument/material	**Periodicity**
Pressure/vacuum gauges, working grade	6 months
Pressure/vacuum gauges, test grade	12 months
Mechanical measuring instrument used on shop floor	6 months
Mechanical measuring instrument used in laboratory	12 months
Electrical meters	12 months
Weighing balance	12 months
Weight box	12 months
Hardness testers	12 months
Temperature measuring system	12 months
Precision laboratory glassware, e.g. pipettes, burettes,	initially on commissioning

Length, pressure and voltage standards	24 months
Mass and temperature standards	12 months
Reference materials	24 months

4. Conclusion

The taking of measurements has been necessary since human beings first began trading with their neighbours. Length and mass were the earliest measurements made by mankind. The constant endeavours of the General Conference on Weights and Measures to improve upon the metric system resulted in the addition of further units of measurement. Today, only the kilogram remains a unit based on an artefact or a physical object, the prototype kilogram kept near Paris. All the other units are defined in terms of wavelength and time, which can be measured and reproduced with a high degree of accuracy and precision. Measurement is vital in science, industry and commerce. Accuracy and reliability of all such measurements would be doubtful if the instruments used were not calibrated. Calibration ensures that a measuring instrument displays an accurate and reliable value of the quantity being measured. Thus, calibration is an essential activity in any measurement process. The testing and calibration of some of the instruments used in industries were reviewed in this paper.

References

[1]. "Measurement management systems: requirements for measurement processes and measuring equipment", *International Organization for Standardization*, (ISO 10012:2003).

[2]. "International Vocabulary of Basic and General Terms in Metrology", *International Organization for Standardization, 2nd ed.* (1993).

[3]. "Measurement System Analysis Reference Manual", *DaimlerChrysler, Ford and General Motors, 3rd ed*. (2002).

[4]. "Role of measurement and calibration in the manufacture of products for the global market", *United Nations Industrial Development Organization*, (2006).

[5]. *www.fcriindia.com*

Note: Most of the information presented in the paper has been conceived during the internship at FCRI, Kanjikode, Palakkad

Maximum Power Point Tracking using Fuzzy Logic Control for Photovoltaic Systems

ANJALI.J.NAIR, DRISHYA.M, HARSHAD.P.A, PRAJITH.M.K
UG Graduates, EASA College Of Engineering And Technology

R UMAMAHESHWARAN, Asst. Professor, EASA College of Engineering and Technology

***Abstract*—In this paper, a fuzzy logic control (FLC) is proposed to control the maximum power point tracking (MPPT) for a photovoltaic (PV) system. The proposed technique uses the fuzzy logic control to specify the size of incremental current in the current command of MPPT. As results indicated, the convergence time of maximum power point (MPP) of the proposed algorithm is better than that of the conventional Perturb and Observation (P&O) technique.**

***Index Terms*—photovoltaic system, MPPT, P&O, Fuzzy Logic Control**

I. INTRODUCTION

IN our world today, the problems caused by global warming and pollution effect become the important issues for research. Renewable energy sources are considered as a technological option for generating clean energy. Among them, photovoltaic (PV) system has received a great attention as it appears to be one of the most promising renewable energy sources. Recently, due to its development and cost reduction, PV system becomes an efficient solution to the environmental problem [1]. However, the development for improving the efficiency of the PV system is still a challenging field of research.

PV system cannot be modeled as a constant DC current source because its output power is varied depending on the load current, temperature and irradiation.

Generally, MPPT is adopted to track the maximum power point in the PV system. The efficiency of MPPT depends on both the MPPT control algorithm and the MPPT circuit. The MPPT control algorithm is usually applied in the DC-DC converter, which is normally used as the MPPT circuit.

Typical diagram of the connection of MPPT in a PV system is shown in Fig. 1.

One of the most popular algorithms of MPPT is P&O (Perturb and Observe) technique; however, the convergence problem and oscillation are occurred at certain points during the tracking. To enhance the performance of the P&O algorithm, this paper presents the application of Fuzzy Logic Control (FLC) to the MPPT control. The simulation study in this paper is done in MATLAB and Simulink.

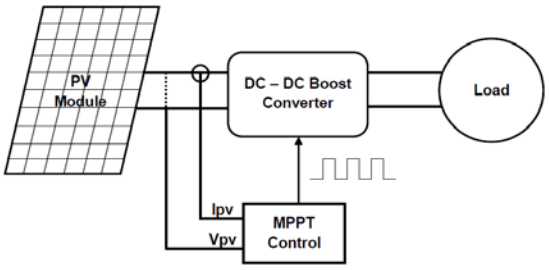

Fig. 1 Typical diagram of MPPT in a PV System

II. PHOTOVOLTAIC EQUIVALENT CIRCUIT

The model of solar cell can be categorized as p-n semiconductor junction; when exposed to light, the DC current is generated. As known by many researchers, the generated current depends on solar irradiance, temperature, and load current. The typical equivalent circuit of PV cell is shown in Fig. 2.

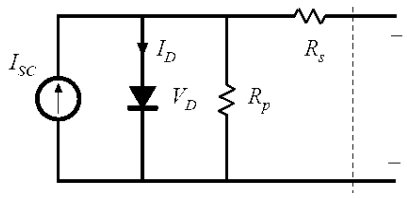

Fig. 2 Typical circuit of PV solar cell

The basic equations describing the I-V characteristic of the PV model are given in the following equations:

$$0 = I_{SC} - I_D - \frac{V_D}{R_P} - I_{PV} \quad (1)$$

$$I_D = I_0(e^{V_D/V_T} - 1) \quad (2)$$

$$V_{PV} = V_D - R_S I_{PV} \quad (3)$$

Where:

I_{PV} is the cell current (A).
I_{SC} is the light generated current (A).
I_D is the diode saturation current (A).
R_s is the cell series resistance (ohms).
R_P is the cell shunt resistance (ohms).
V_D is the diode voltage (V).
V_T is the temperature voltage (V).
V_{PV} is the cell voltage (V).

III. MAXIMUM POWER POINT TRACKING TECHNIQUES

A. Perturb and Observation (P&O)

One of the most simple and popular techniques of MPPT is the P&O technique. The main concept of this method is to push the system to operate at the direction which the output power obtained from the PV system increases. Following equation describes the change of power which defines the strategy of the P&O technique.

$$\Delta P = P_k - P_{k-1} \tag{4}$$

If the change of power defined by (4) is positive, the system will keep the direction of the incremental current (increase or decrease the PV current) as the same direction, and if the change is negative, the system will change the direction of incremental current command to the opposite direction. This method works well in the steady state condition (the radiation and temperature conditions change slowly). However, the P&O method fails to track MPP when the atmospheric condition is rapidly changed. Flow chart of the P&O method is described in Fig. 3.

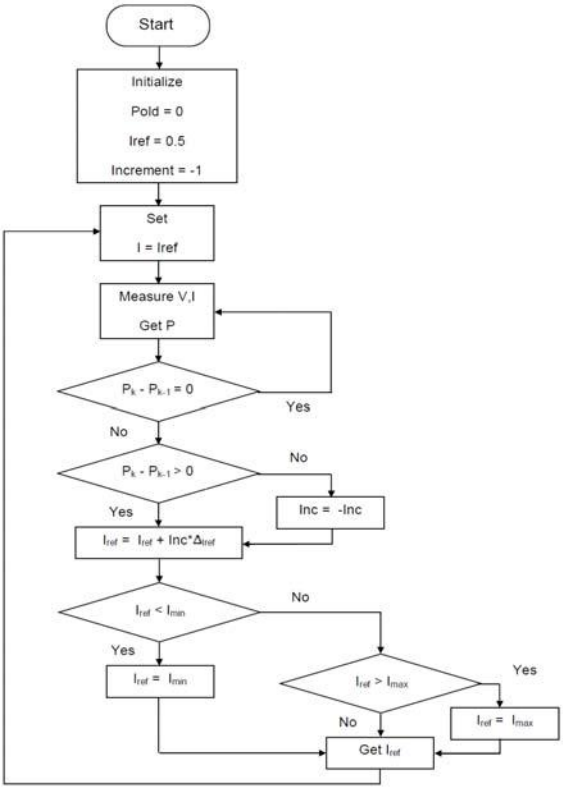

Fig. 3 Flow Chart of the P&O Method.

B. MPPT using Fuzzy Logic Control

MPPT using Fuzzy Logic Control gains several advantages of better performance, robust and simple design. In addition, this technique does not require the knowledge of the exact model of system. The main parts of FLC, fuzzification, rule-base, inference and defuzzification, are shown in Fig. 4. In the proposed system, the input variables of the FLC are the change in PV array power (ΔP_{pv}) and the change in PV current (ΔI_{pv}), whereas the output of FLC is the magnitude of the change of boost converter current reference (ΔI_{ref}). The current reference is the command for controlling the current drawn from the PV. Flow chart of the proposed FLC is shown in Fig. 5. The equations for ΔP_{pv} and ΔI_{pv} are given as follows:

$$P_{pv}^{k} = V_{pv}^{k} \cdot I_{pv}^{k} \tag{5}$$

$$\Delta P_{pv}^{k} = P_{pv}^{k} - P_{pv}^{k-1} \tag{6}$$

$$\Delta I_{pv}^{k} = I_{pv}^{k} - I_{pv}^{k-1} \tag{7}$$

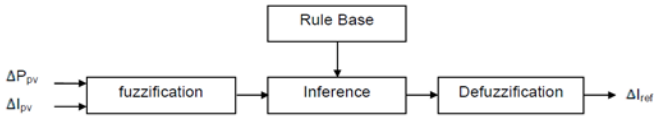

Fig. 4 The Fuzzy Logic Controller

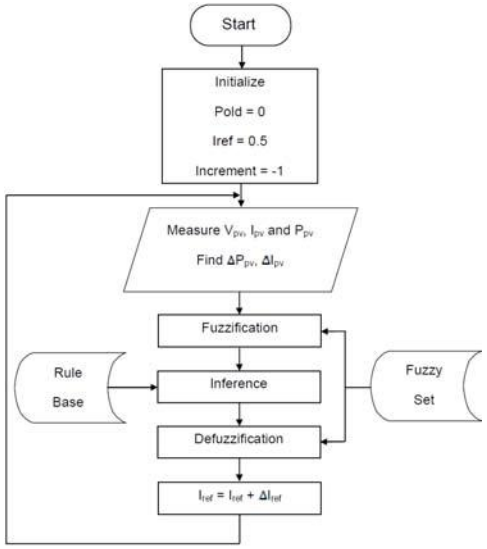

Fig. 5 Flowchart of the proposed FLC method

In the proposed design, the universe of discourse for the first input variable (ΔP_{pv}) is assigned in terms of several linguistic variables by using seven fuzzy subsets, which are denoted by NB (negative big), NM (negative medium), NS (negative small), Z (zero), PS (positive small), PM (positive medium) and PB (positive big). The membership functions for the variable are shown in Fig. 6. Fig. 7 shows the universe of discourse for the second input variable (ΔI_{pv}), which is classified into 3 fuzzy sets, namely, Negative (N), Zero (Z) and Positive (P). Fig.8 shows the control surface of the output variable, ΔI_{ref}.

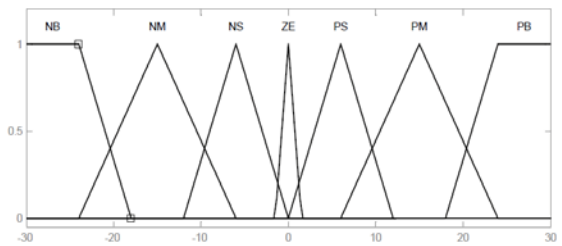

Fig. 6 Membership Functions of the 1st Input Variable 1st (ΔP_{pv})

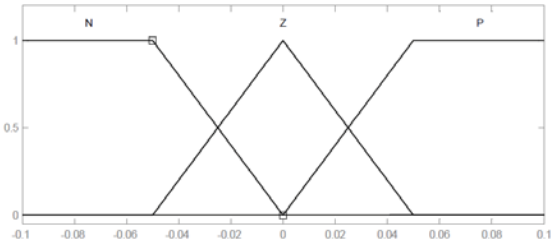

Fig. 7 Membership Functions of the 2nd Input Variable 2nd (ΔI_{pv})

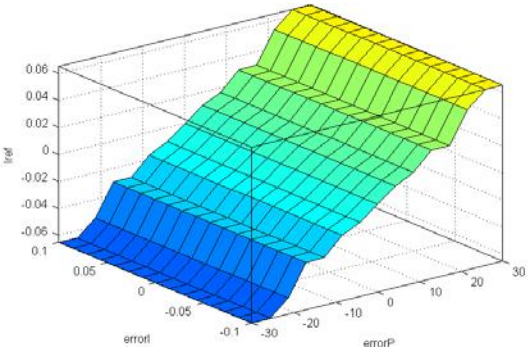

Fig. 8 Sugeno Control Surface, Output Variable (ΔI_{ref})

Based on the knowledge of the authors, the fuzzy system rules can be designed as shown in Table 1. ΔP_{pv} and ΔI_{pv} are the inputs while ΔI_{ref} is the output. The fuzzy inference of the proposed FLC is based on the Sugeno's method which is associated with the max-min composition.

Table 1: Rules for the proposed FLC

Rule no.	If ΔPpv	And 9ΔIpv	Then ΔIref	Singletons
1	PB	P	PB	0.065
2	PM	P	PM	0.03
3	PS	P	PS	0.01
4	ZE	P	PS	0.01
5	NS	P	NS	-0.01
6	NM	P	NM	-0.03
7	NB	P	NB	-0.065
8	PB	Z	PB	0.065
9	PM	Z	PM	0.03
10	PS	Z	PS	0.01
11	ZE	Z	ZE	0
12	NS	Z	NS	-0.01
13	NM	Z	NM	-0.03
14	NB	Z	NB	-0.065
15	PB	N	NB	-0.065
16	PM	N	NM	-0.03
17	PS	N	NS	-0.01
18	ZE	N	NS	-0.01
19	NS	N	PS	0.01
20	NM	N	PM	0.03
21	NB	N	PB	0.065

IV. MODEL OF THE SYSTEM

The proposed Fuzzy Logic Control based MPPT has been modeled and simulated using MATLAB/Simulink. Fig. 9 shows our developed Simulink model. In the simulation study, the fuzzy logic based MPPT control is simulated and compared with the conventional P&O technique under the operating condition assuming the constant temperature and varying isolation (0 to 1000 W/m^2). The step size of incremental current in the P&O technique uses the appropriate value found by trial and error technique. The MPPT control consists of two main parts, FLC and current control, as depicted in Fig. 9. The specifications of PV module used in this simulation are shown in Table 2.

Table 2 the specification of PV module used in the simulation.

Short Circuit Current	7.8	A
Open Circuit Voltage	21	V
Current at Pmax	6.72	A
Volt at Pmax	12.7	V

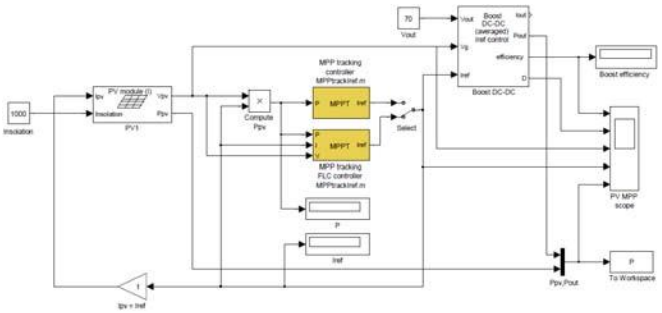

Fig. 9 Model of the developed PV System in MATLAB/Simulink

V. RESULT AND DISCUSSION

Figs. 10 and 11 show the results of the I-V and P-V characteristic curves of the PV module with the varying of irradiation. As seen in these figures, the I-V curves and the maximum points in the P-V curves are changed under the variations of operating condition.

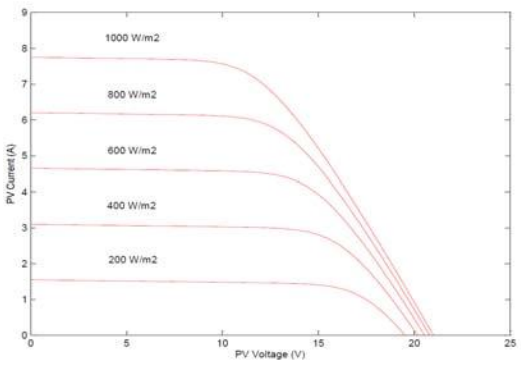

Fig. 10 I-V Characteristic Curves

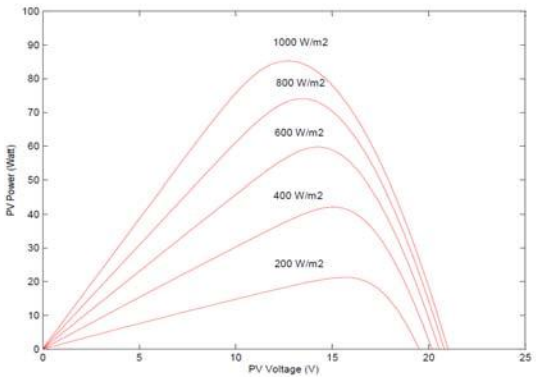

Fig. 11 P-V Characteristic Curves

The performance of MPPT using the FLC and the simple P&O techniques is verified by operating them under the variation of irradiance. Fig. 12 shows the transient responses of the tracking power curves obtained from both control algorithms. As seen in the figure, the proposed response is much faster than that of the conventional MPPT while the overshoots of the system are almost the same. Fig.13 shows the energy obtained from the both controllers; clearly, the proposed controller gains more energy than the conventional P&O technique.

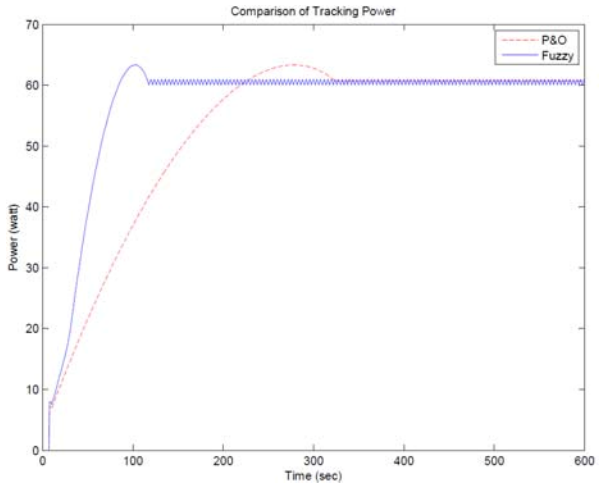

Fig. 12 Tracking curves by the FLC and P&O Methods

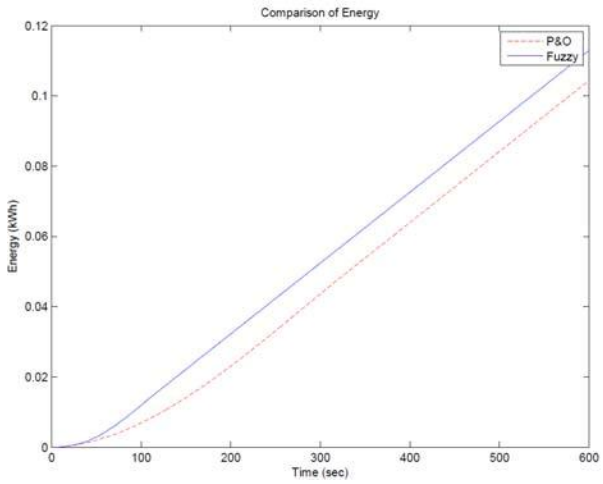

Fig. 13 Energy obtained from the both controllers.

Fig. 14 shows the performance of the PV system using FLC and P&O algorithms under fast changing of irradiance. The irradiance values are 400, 400, 600, 600, 600, 600, 1000, 1000, 600, 600, 600, 600, 200 and 200 W/m^2 at 0, 60, 120, 180, 240, 300, 360, 420, 480, 540, 600, 660, 720, and 780 seconds, respectively. The MPPT using FLC gives the results better than the P&O in several areas of the tracking curve. Fig. 15 shows the energy gained from the tracking power curve in Fig. 14; clearly, the energy gained from the proposed technique is higher than that of the conventional technique.

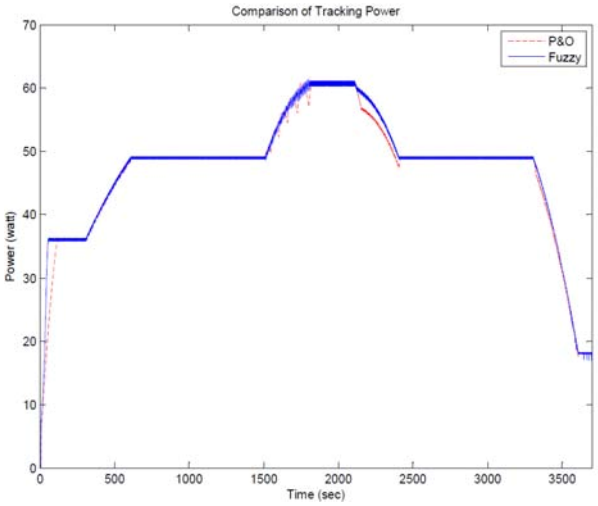

Fig. 14 MPP Tracking curves by the FLC and P&O methods.

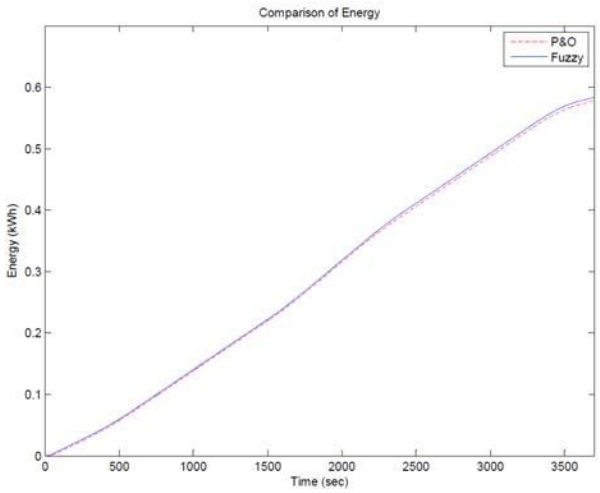

Fig.15 Energy obtained from the MPP tracking curves in Fig. 14.

VI. CONCLUSIONS

This paper presents an intelligent control strategy of MPPT for the PV system using the FLC. Simulation results show that the proposed MPPT can track the MPP faster when compared to the conventional P&O method. In conclusion, the proposed MPPT using fuzzy logic can improve the performance of the system. For the future work, we intend to implement the proposed technique in the real PV system.

REFERENCES

[1] "Maximum Power Point Tracking in Grid Connected PV System Using A Novel Fuzzy Logic Controller", *IEEE Student Conference on Research and Development*, November 2009.

[2] "Comparison of fuzzy logic and neural network in maximum power point tracker for PV systems", *ScienceDirect Electric Power Systems Research*, July 2010, pp.43–50.

[3] "A New Maximum Power Point Tracking for Photovoltaic Systems", *World Academy of Science, Engineering and Technology*, Vol. 34,October 2008.

[4] "Genetic algorithms optimized fuzzy logic control for the maximum power point tracking in photovoltaic system", *ScienceDirect Renewable Energy* 34, January 2009, pp.2093–2100.

[5] "Maximum power point tracking using a fuzzy logic control scheme", *Revue des Energies Renouvelables*, Vol. 10, No. 32, September 2007, pp. 387 – 395.

FUZZY CONTROL SCHEME FOR ARTERIAL BLOOD PRESSURE REGULATION IN HYPERTENSIVE PATIENTS

Anju Cheriyachan[#1], Nafeesa K[*2]

#Department of EEE, MES College Engineering, Kuttipuram

[1]anjucheriyachan@gmail.com, [2] nafeesakm@gmail.com

Abstract

After cardiac operation, severe complications may occur in patients due to hypertension. It may damage heart cells, causes excessive bleeding, bursting of veins in brains etc. To decrease the chances of complication, the mean arterial pressure (MAP) must be maintained at a desired level. This is achieved by intravenous infusion of suitable vasodilator drugs such as sodium nitroprusside (SNP). Clinically the drug injection is achieved using manual drug delivery. Manual control may be time consuming, and of poor quality. Due to disturbances that perturb pressure, the changing conditions of patient, and the wide range of response characteristics, determining the right drug infusion may be difficult. So an automatic drug delivery system can be employed. In this paper, an automated drug delivery system using fuzzy logic controller is designed and simulated. The real time cases are introduced to the system as constraints. The result shows that the performance of the fuzzy controller was found satisfactory.

Key words: ***Automated Drug Delivery System, Fuzzy Controller, Mean Arterial Pressure, Sodium Nitroprusside.***

1. Introduction

The pressure exerted by circulating blood upon the blood vessels is termed as blood pressure. It usually refers to the arterial pressure of the systemic circulation. During each heartbeat, blood pressure varies between a maximum and a minimum pressure [1]. The pressure exerted due to pumping of heart causes systolic pressure (SP) and the pressure exerted by blood vessels causes' diastolic pressure (DP). The blood pressure in circulation is principally due to heart rate. A person's blood pressure is usually expressed in terms of the systolic pressure over diastolic pressure and is measured in millimeters of mercury (mmHg), for example 120/80. Blood pressure that is pathologically low is called hypotension and which is pathologically high is hypertension. In most cases, we measure the mean arterial pressure (MAP) by using equation (1).

$$MAP = DP + \frac{1}{3}(SP - DP) \quad (1)$$

After cardiac operation, severe complications may occur in patients due to hypertension. It may damage heart cells, causes excessive bleeding, bursting of veins in brains etc. To decrease the chances of complication, the MAP must be maintained at a desired level. This is achieved by intravenous infusion of suitable vasodilator drugs such as sodium nitroprusside (SNP), Nitroglycerin, etc., which are commonly used for the treatment of hypertensive cardiac patients. The infusion of these drugs will generate Nitric Oxide (NO) and there by reduces the MAP. It causes widening of blood vessels and has less side effects [2]. Clinically the drug injection is achieved using manual drug delivery. Manual control may be time consuming, and of poor quality. Due to disturbances that perturb pressure, the changing conditions of patient, and the wide range of response characteristics determining the right drug infusion may be difficult. So an automatic drug delivery system can be employed for drug delivery. The main aim of this paper is to control the drug infusion rate such that the MAP is regulated within desired limits.

2. Patient Modeling

Normal patients are said to be having hypertension, if the mean arterial pressure is above 110 mmHg. However for aged people, their normal range is usually more than 110 mmHg [3]. But for some critical cases, their blood pressure must be lowered to below 110mmHg. Also, for malignant hypertension, the diastolic pressure will be more than 130mmHg. Table 1 show the classification of hypertension in adults, where N indicates Normal pressure, H- Hypertensive and HH- High Hypertensive.

Table 1 Classification of hypertension in adults

SYSTOLIC PRESSURE(mmHg)	DIASTOLIC PRESSURE(mmHg)	MEAN ARTERIAL PRESSURE(mmHg)	STAGE
140	90	105	N
150	90	110	N
160	110	127	H
160	120	133	H
170	130	143	HH

180	140	153	HH
190	140	156	HH
200	150	166	HH

J. B. Slate in 1980 [4] have developed a model based design of a controller for infusing nitroprusside during post-surgical hypertension. In this, the patient's response to SNP drug was successfully modelled. A dynamic model of patient MAP to SNP infusion rate is given by,

$$MAP = MAP_0 + \Delta MAP + MAP_n \tag{2}$$

Where MAP is the mean arterial pressure, MAP_0 is the initial blood pressure, ΔMAP is the change in blood pressure due to infusion of SNP, MAP_n is the plant background noise. MAP_0 is usually 140-160mmHg. A continuous-time model describing the relationship [5] between the change in blood pressure and the SNP infusion rate is given by,

$$\frac{\Delta MAP}{SNP(s)} = \frac{K\, e^{-T_1 s}(1+\alpha e^{-T_2 s})}{1+\tau s} \tag{3}$$

Table 2 Parameters of Slate's model

Parameter	Range of parameter	Normal value	Units
K	$0.25 \le K \le 8$	5	mmHg/ml/h
A	$0 \le \alpha \le 0.4$	0.1	
T_1	$20 \le T_1 \le 60$	25	Sec
T_2	$20 \le T_1 \le 60$	35	Sec
T	$40 \le \tau \le 60$	50	Sec

Where, K is the drug sensitivity, α is the recirculation constant, T_1 represents the initial transport lag from injection site, T_2 is the recirculation time delay, i.e. time required for drug to flow through the body. The parameter τ is the lag time constant resulting from the uptake, distribution and biotransformation of the drug. The parameter range of the model is given in Table 2 [6].

3. Controller Design

Consider the system described by the equations (2) and (3). The input is the drug i.e. Sodium nitroprusside (SNP) and the output is the mean arterial pressure [7].

3.1 Fuzzy Controller

A fuzzy control system is a control system based on fuzzy logic that analyzes analog input values in terms of logical variables that take on continuous values between 0 and 1. It consists of an input stage, a processing stage, and an output stage [8]. The input variables in a fuzzy control system are mapped by sets of membership functions, known as fuzzy sets. The process of converting input value to a fuzzy value is called fuzzification. The fuzzy rule sets usually have several antecedents that are combined using fuzzy operators- AND, OR, and NOT. AND, uses the minimum weight of all the antecedents, while OR uses the maximum value. NOT operator subtracts a membership function from 1 to give the complementary function. The processing stage invokes each appropriate rule and generates a result for each, then combines the results of the rules. Finally, the output stage converts the combined result back into a specific control output value. The process of converting fuzzy value to output value is called defuzzification. The most common shape of membership functions is triangular, although trapezoidal and bell curves are also used, but the shape is generally less important than the number of curves and their placement.

The fuzzy controller used with this system has two inputs and an output. The error and rate of change of error are the inputs and the drug infusion rate is the output. The error *E(t)* and the rate of change of error *R(t)* are given by,

$$E(t) = MAP_C(t) - MAP(t) \tag{4}$$

$$R(t) = E(t) - E(t-1) \tag{5}$$

The range of error will be in the range,

$$0 \leq E(t) \leq 100mmHg$$

The tolerance limit of error is within $0 \leq E(t) \leq 10mmHg$. The rate of change of MAP determines the patient sensitivity [9], i.e. it gives a measure of how blood pressure varies in different patients, which is a measure of sensitivity to that drug, for the patient . Table 3 shows the fuzzy control algorithm.

$$|\Delta MAP(t)| = |MAP(t) - MAP(t-1)| \leq 15mmHg$$

Table 3 Fuzzy control algorithm

ΔMAP(t) E(t)	PB	PS	NS	NB	NVB
E1	D1	D1	D0	D0	D0
E2	D3	D2	D1	D1	D0
E3	D4	D3	D2	D2	D1
E4	D5	D5	D4	D3	D3
E5	D6	D5	D5	D4	D4
E6	D7	D7	D6	D6	D5
E7	D8	D8	D7	D6	D6

The pressure should not drop more than 20*mmHg* below the set point. Since the set point given is 100*mmHg*, the minimum acceptable value of the blood pressure is 80*mmHg*. Figure 1 shows the surface view of fuzzy controller.

The output of the controller is the SNP infusion rate (D). The SNP drug has toxic side effects if large amount of drug is infused. So the output is constrained to [10],

$$0.5 \leq SNP(t) \leq 8\mu g/Kg\ /min$$

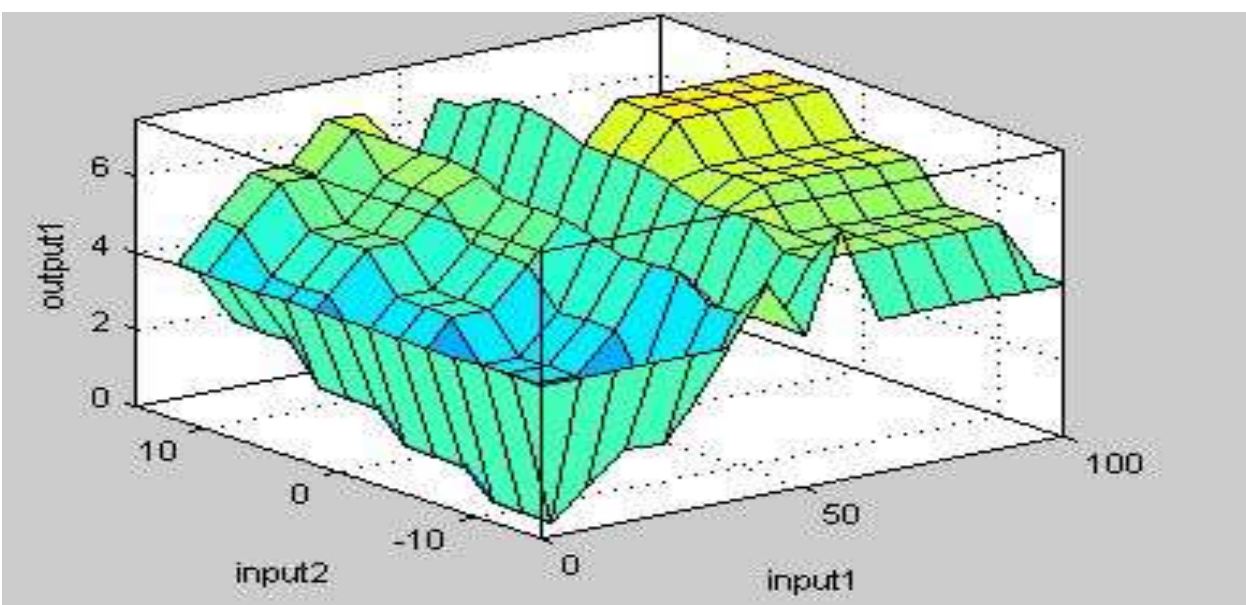

Figure 1. Surface view of fuzzy controller.

4. Results and Discussion

The inputs to the controller are error and variations of the mean arterial pressure. The output is the drug concentration. Simulations are carried out in MATLAB- Simulink environment. The response obtained for an initial pressure of 160mmHg is plotted in Figure 2. It is found that the MAP reaches within the tolerance limit in 200sec. It is also seen that it has less oscillations and settles faster.

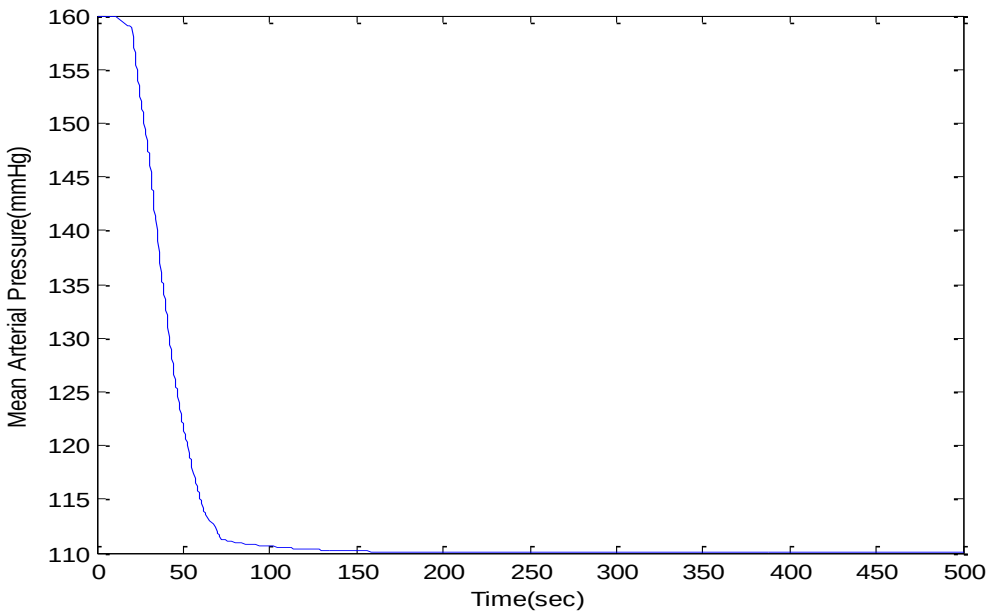

Figure 2. Patient responses with fuzzy controller

5. Conclusion and future works

Mean arterial pressure can be brought to the reference pressure by controlled infusion of vasodilator drug sodium nitroprusside. The Slate's model for SNP drug infusion has been controlled by fuzzy controller. The result obtained was found satisfactory. The constraints to the controller are given, considering practical conditions. The drug infusion rate can also be limited without the use of complex controllers. In future, a comparative study on different controllers can be done. Also the simulations considering real time patient data can also be carried out.

Reference

[1] K E Barrett, S M.Barman, S Boitano, Heddwen L Brooks, "Ganong's Review of Medical Physiology*" 23rd edition,* pp. 489-569, 2010.

[2] Michael C K Khoo , "Physiological control systems- analysis, simulation and estimation", *IEEE press,* pp 13- 271

[3] S Isaka, "Control Strategies for arterial blood pressure regulation", *IEEE trans. on Bio. Engg* vol. 40. No 4, April 1993.

[4] J B Slate, L C Sheppard, "Automatic Control of Blood Pressure by Drug Infusion*", IEEE Proc.* Vol. 1 29, pp.639-645, 1982.

[5] Y Gao and M J Er, "An Intelligent Adaptive Control Scheme For Postsurgical Blood Pressure Regulation*", IEEE Trans. Neural Networks*, vol 16,pp 475-483, 2005.

[6] H Zheng, K Zhu, "Automated post-operative blood pressure control*", Jour. Cont. theory and Appln*, vol 3 , 227-212, Jun, 2005.

[7] K Y Zhu, H. Zheng, J. Lavanya, "An adaptive PI controller for regulation of blood pressure of Hypertension patients", *IEEE Proc, ICASE,*Aug 2005.

[8] H Ying, M McEachern, D W Eddlean, L C Sheppard "Fuzzy Control of Mean Arterial Pressure in Postsurgical Patients with Sodium Nitroprusside Infusion" , *IEEE Trans. On Bio. Engg.,* vol 39, no 10, Oct, 1992.

[9] G A Pajunen, M Steinmetz, R Shankar, "Model Reference Adaptive Control With Constraints For Postoperative Blood Pressure Management", *IEEE Trans, on Bio. Engg* , vol 37. No 7, Jul 1990.

[10] D L Kasper, E Braunwald, S Hauser, D Longo, J L Jameson, A S Fauci, " Harrison's Principles of Internal Medicine" , *16th edition,* 2005.

Comparing Harmonic Distortions in Icosikaitetragonal and Dodecagonal Voltage Space Vector Modulations

Antony K Peter, Baby Kavitha M.V

Electrical & Electronics Engineering Department, Mahatma Gandhi University

Sree Narayana Gurukulam College of Engineering, Kadayiruppu, Kerala, India

antonykannanaykal@gmail.com

kavithasabu@gmail.co

Abstract:

A multilevel inverter topology is designed which is suitable for generating multilevel icosikaitetragonal (24 sided) space vectors for an induction motor drive is proposed. The motor is fed from one end with a three-level inverter and other end with a four level inverter, The structure of this inverter is realised by cascading conventional two-level inverters. Icosikaitetragonal space vector modulation increases the modulation range, makes the output waveform more sinusoidal, brings down the total harmonic distortion. FFT analysis of the proposed inverter is compared with dodecagonal space vector modulation and the nature of harmonic distortions is studied.

1.Introduction

Conventional 2-level inverter fed drives are well established for low voltage drive applications. In the 2- level inverter, pole voltages can attain two distinct voltages (+Vdc or zero), if the switches in the inverter leg are switched in a complementary fashion. Interest in multi level inverter is started with the 3-level topology proposed by Nabae[1]. In this topology a third level and four level is formed by the neutral-point of the DC bus and hence the terminology Neutral Point Clamped. The advantage of multilevel inverters is that the power circuit can be realised with low voltage devices, and also they can be operated at lower switching frequency with lower switching losses.

Other advantages are reduced Electromagnetic interference and reduced harmonic distortion. The neutral point clamped inverter can be extended to higher number of levels.

Now there are other popular multilevel inverter topologies such as the cascaded H-bridge and flying capacitor. In high power electric drives, multilevel inverters are generally used to solve issues such as electromagnetic interference, switch voltage stress and harmonic distortion. Multilevel inverters can also be realised by feeding the induction motor from both ends (open-end winding)[2],[3], using conventional inverter structure. Open end winding induction motors are now used in ship and traction systems.

A 24-stepped multilevel inverter is an advanced version of conventional inverters in case of modulation range and total harmonic distortion. The 5th and 7th, 11th and 13th, 17th and 19th harmonics are almost removed from the inverter output voltages of the proposed 24-stepped multilevel inverter structure. In the extreme modulation range a 24-step voltage waveform is produced.

2. Inverter Power Circuit

The power circuit to achieve the 24-stepped multilevel inverter is shown in Fig.1.a. The power circuit consists of a 3-level inverter and a 4- level inverter connected to either sides of an open ended induction motor. The 4-level inverter is made by cascading three conventional 2-level inverters and three level inverter is made by cascading two 2- level inverters. Different DC link voltages are used in the power circuit. Each pole A, B or C can be connected to any of the DC-link voltages of 0.8163Vdc, 0.577Vdc or to the bottom 0V. The 4-level inverter on other side, makes it possible to connect the pole A', B' or C' to any of four levels 1Vdc, 0.577Vdc, 0.298Vdc, 0Vdc. This inverter structure can be used to generate 24-stepped sine wave. For the five inverters used in the power circuit INV1, INV2, INV3, INV4, INV5, the top and bottom switches in each leg are operated in a complementary manner.

For the proposed inverter we can achieve 11 different voltage levels for each winding. That means there is a total of 11^3 =1331 switching states. Out of these 1331 switching states, the vectors which lie on the vertices of a 24-sided polygon are selected to generate 24-stepped sine wave. The 24 voltage space vectors from the proposed inverter structure are shown in Fig.1.b. The angle between two adjacent vectors is 15º. The resultant vector at any instant is given by the equation[4]

$$V_{ref} = (2/3)\ (V_a + V_b\, e^{j120} + V_c\, e^{j240}$$

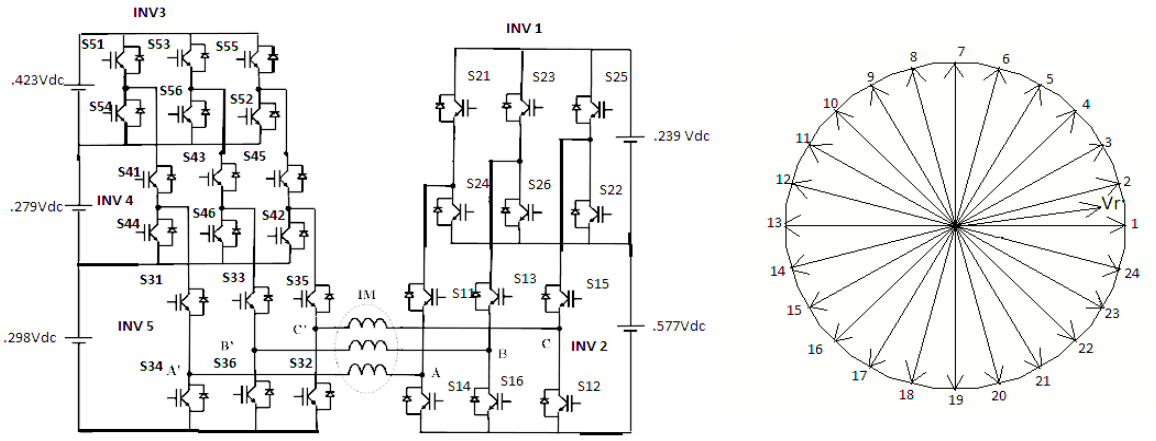

(a) (b)

Fig.1: Power circuit of the proposed inverter generating 24-sided polygonal Voltage space vector

3. Switching States

These are the 24 switching states selected for generating 24 stepped sine wave output from the 1331 switching states. These switching states are shown in Table.1 For the poles A', B', C' switching states can be 0,1,2,3, where switching state 0 means 0Vdc, 1 means 0.298Vdc, 2 means 0.577Vdc and 3 means 1Vdc. Similarly for the poles A, B, C switching states can be 0,1,2, where switching state 0 means 0Vdc, 1 means 0.577Vdc and 2 means 0.816Vdc. Voltage that comes across phase A will be the difference in voltage between pole A and pole A'. The 11 different voltage levels that can be achieved by phase A is shown in the Table.2.Similarly phase B and Phase C can also have 11 different voltage levels.

Vector 1 of Fig.1.b. is the resultant of the sum of voltage vectors produced by B & C windings of induction motor. Pole voltages A', B', and C' are subtracted from the pole voltages A, B, C, hence when B' is connected to 1Vdc it is along the negative B-axis and C' is connected to 1Vdc which is along the negative C-axis so their resultant have magnitude 1Vdc along A-axis. It is to be noted that all other pole voltages other than B' & C' are connected to 0Vdc.

Vector-2 is generated by the following method. Pole A is connected to 0.8163Vdc, poles B & C to 0Vdc. Pole C' is connected to 0.298Vdc, with A' and B' being 0Vdc. Again subtracting voltages A',B',C' from A,B,C, we get two voltage vectors one along A axis with magnitude

0.8163Vdc and the other along the negative direction of C axis with magnitude 0.298Vdc. The resultant of these two vectors gives voltage vector 2.

Vector No:	Pole A'	PoleB'	Pole C'	Pole A	PoleB	Pole C
1	0	3	3	0	0	0
2	0	0	1	2	0	0
3	0	0	2	1	0	0
4	0	1	1	2	2	0
5	0	0	3	0	0	0
6	1	0	1	2	2	0
7	0	0	2	0	1	0
8	0	0	1	0	2	0
9	3	0	3	0	0	0
10	1	0	0	0	2	0
11	2	0	0	0	1	0
12	1	0	1	0	2	2
13	3	0	0	0	0	0
14	1	1	0	0	2	2
15	2	0	0	0	0	1
16	1	0	0	0	0	2
17	3	3	0	0	0	0
18	0	1	0	0	0	2
19	0	2	0	0	0	1
20	1	1	0	2	0	2
21	0	3	0	0	0	0
22	0	1	1	2	0	2
23	0	2	0	1	0	0
24	0	1	0	2	0	0

Table.1

Vector-3 is generated by connecting Pole A to 0.577Vdc, poles B to 0Vdc,Pole C to 0Vdc, Pole C' to 0.577Vdc, Pole A' and B' to 0Vdc respectively. Subtracting pole voltages A',B',C' from A,B,C, gives two voltage vectors; one along A axis with magnitude 0.577Vdc

and the other along the negative direction of C axis with magnitude 0.577Vdc. The resultant of these two vectors gives the voltage vector.

Switching states of pole A	Switching states of pole A'	Pole Volt1age Va	Pole Voltage Va'	Phase A voltage
0	0	0	0	0
1	0	0.577	0	0.577
2	0	0.816	0	0.816
0	1	0	0.298	-0.298
1	1	0.577	0.298	0.279
2	1	0.816	0.298	0.518
0	2	0	0.577	-0.577
1	2	0.577	0.577	0
2	2	0.816	0.577	0.239
0	3	0	1	-1
1	3	0.577	1	-0.423
2	3	0.816	1	-0.184

Table.2

4. PWM Calculations

The reference vector Vr in any sector can be generated by repeated switching of two adjacent vectors for a sampling period of Ts seconds. Ts represents the sampling period for any sector. The reference vector is generated by time averaging two adjacent vectors. Inorder to generate reference vector in sector 1, vector-1 and vector-2 are switched on for T1 and T2 seconds respectively. The reference vector thus generated will lie at an angle between 0^0 and 15^0. For the time interval T0=Ts-T1-T2, zero voltage level is maintained [5]. Let V be the magnitude of vectors 1 and 2 etc. and 'm' be the sector number in which Vr lies. The volt second balance equation in any sector is shown below.

$$\left(\frac{T_1}{T_2}\right) = \frac{2.924 * T_s}{V} \begin{bmatrix} Sin(m15^0) & -Cos(m15^0) \\ -Sin((m-1)15^0) & Cos((m-1)15^0) \end{bmatrix}$$

5. Simulation and Experimental Result

The radius of the 24 sided polygonal voltage space vector was kept at 75V for the present study Vdc = 100 V, 50 Hz, operation is simulated using SIMULINK. A Icosikaitetragonal and dodecagonal space vector is also simulated with same conditions. Its waveforms are shown in Fig.2 & Fig.3 for comparison. Because the objective of this paper is to show icosikaitetragonal space vector modulation is an advanced version of conventional hexagonal or dodecagonal space vector modulation. To prove that both space vector techniques are simulated under similar conditions, this makes the comparison easy.

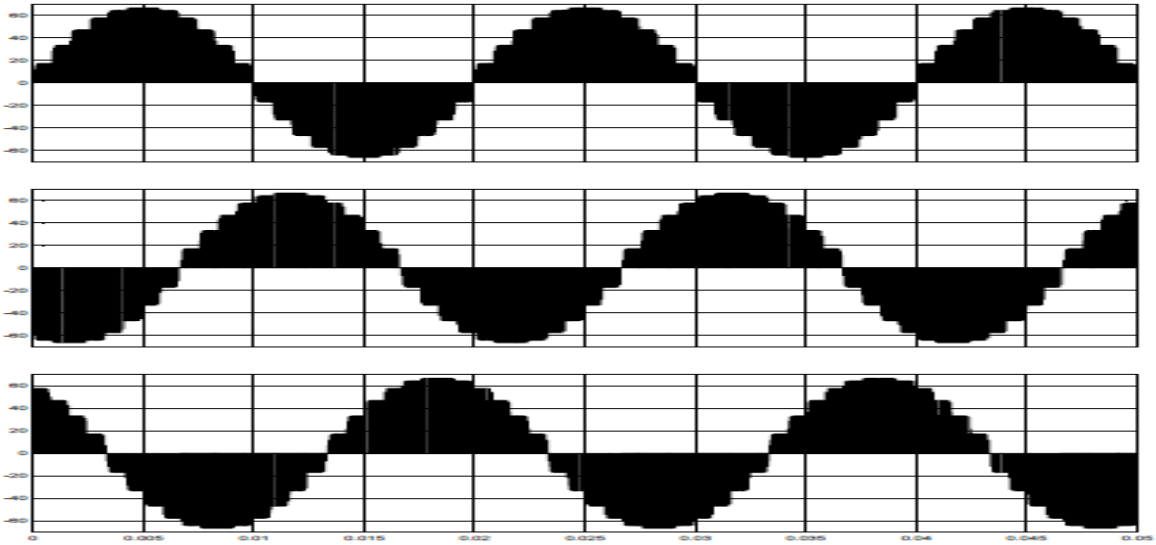

Phase voltage waveforms for a,b,c windings of Icosikaitetragonal SVPWM

Fig.2

Phase voltage waveforms for a,b,c windings of dodecagonal SVPWM

Fig.3

Phase voltage waveform of icosikaitetragonal space vector modulation is shown in Fig.2. Since there are 24 steps in each cycle of voltage waveform, we can say it is more nearer to sinusoidal structure. By proper inspection of the above waveform it is clear that each phase voltages are displaced by120^0 electrical.

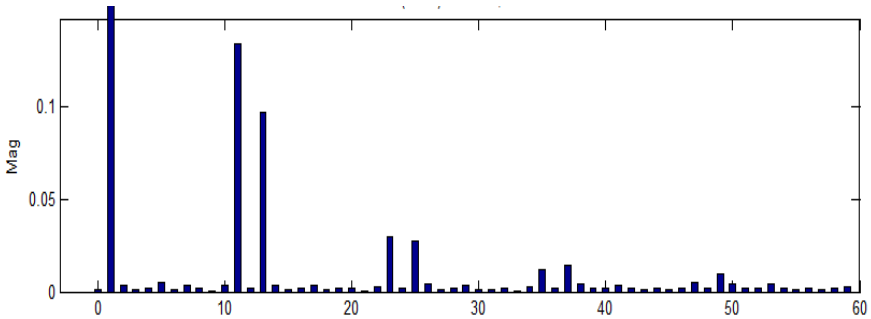

FFT analysis of dodecagonal SVPWM

Fig.4

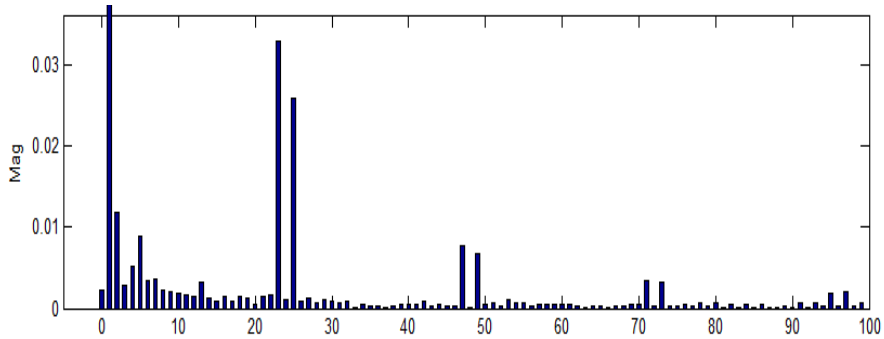

FFT analysis of Icosikaitetragonal SVPWM

Fig.5

Fig.4. & Fig.5. shows the FFT analysis of Dodecagonal and icosikaitetragonal SVPWM. From the waveform it is clear that harmonics are very much reduced in proposed icosikaitetragonal SVPWM. By the above simulation results it can be concluded that icosikaitetragonal space vector modulation is an improved version of conventional hexagonal and octadecagonal space vector modulation.

6. Conclusion

A multilevel inverter with 24-sided polygonal voltage space vectors is proposed for an induction machine with open-end winding structure. The power circuit consists of a 3-level inverter on one side and a four level inverter on another side of the open-end windings. This will make the power circuit structure very simple and easy to fabricate, for the proposed inverter fed IM drive scheme. Asymmetric DC-links voltages are required for the inverters. A

simulation study is carried out using SIMULINK. The proposed 24-sided polygonal voltage space vector structure also gives an increased modulation range with lower Total harmonic distortion and more sinusoidal voltage waveforms. So the proposed scheme can be considered as available alternative for low and medium voltage high power IM drive applications.

7.References

1) Nabae, I. Takahashi, and H. Akagi, "A new neutral point clamped PWM inverter," IEEE Trans. Ind. Appln., vol. 17, pp. 518-522, 1981

2) H. Stemmler and P. Geggenbach, "Configurations of high power voltage source inverter drives," Proc. Conf. Rec.EPE 1993, vol. 5, pp. 7-14, 1993.

3) E.G. Shivakumar, K. Gopakumar, S.K. Sinha, A. Pittet and V.T.Ranganathan,"Space vector PWM control of dual inverter fed openend winding induction motor drive," Proc. Conf. Rec. APEC2001, vol.1, pp. 399-405, 2001.

4) Mathew K., Najath Abdul Azeez and Gopakumar K., Fellow, "Multilevel Inverter with 18-sided Polygonal Voltage Space Vector for an Open endWinding 978-1- 4673-0803-8/12 ©2012 IEEE.

5) Baohua Lang, Miao Miao,Weiguo Liu and Guangzhao Luo,"Simulation and Experiment Study of Space Vector Pulse Width Modulation" The Ninth International Conference on Electronic Measurement & Instrument, ICEMI'2009.

A REVIEW OF MATRIX CONVERTERS APPLIED TO WIND ENERGY CONVERSION SYSTEMS OF SMALL CAPACITY

Manikumar V M

S_2 M.Tech EEE

Sree Narayana Gurukulam College of Engineering Kolenchery
Kerala, India
manikumarvm2010@gmail.com

Mrs.Shemi P A

Department of Electrical Engineering
Sree Narayana Gurukulam College of Engineering Kolenchery
Kerala, India
shemisngce@gmail.com

Abstract

Matrix converter is an array of controlled bi-directional semiconductor switches that directly connects an m-phase voltage source to an n-phase load. For converting a three phase voltage source to a three phase load, an arrangement of Matrix converter with nine bi-directional switches is used. Matrix converter provide the input and output with minimal higher order harmonics and no sub harmonics. The input power factor can be fully controlled and the energy storage requirement is minimum. Even if matrix converters have the above said advantages, the realization of fully controlled bi-directional switch is a problem.

As the global electrical energy consumption is still rising, power generation from renewable energy source like wind energy is to be increased. By using the high efficient power electronics in generation transmission/distribution and end user application, the effective utilization of electrical power can be ensured. Wind speed is the control variable in a wind turbine system. More portion of the available wind energy can be converted to electrical energy by the use of variable speed wind turbine system. Constant frequency constant voltage output can be generated from a variable speed turbine by using suitable topology of the power converters. Out of this, Matrix converter is an advanced technology which found its own space in this field.

For reducing the dependency of small domestic consumers on the Electricity Board supply, we can introduce small capacity wind power generation systems which are not integrated to the grid. Matrix converters can be used as an intermediate stage between the wind turbine and domestic load, to supply a constant frequency constant voltage output. Here in this paper it is

tried to explain the different types of Matrix converters that can be used for this type of small capacity wind energy conversion systems.

Key words: Matrix converter, MPPT, PMSG.

1. Introduction

The global electrical energy consumption is rising and the power capacity to be doubled within 20 years. To meet this problem, the electrical power production source is to be changed from the conventional fossil based energy sources to the renewable energy resources. By the efficient and effective utilization of modern power electronic concepts, the energy loss can be reduced or the optimal generation is possible which means the conservation of energy. The most emerging renewable energy resources are solar energy and wind energy. The generation transmission and distribution of electrical energy is costly and also cause for losses. By increasing the penetration of small capacity wind generation units for standalone loads, we can reduce the effective load on grid. Grid integrated wind energy conversion systems cause more complex controls of power grid. Wind turbine technology started in the 1980's with small capacity of power like few tens of kW to several MW size on today. In the earlier days wind energy conversion systems means, integration of a fixed speed synchronous generator to the grid where active and reactive power control is not done. The power electronics is changing the basic characteristics of the wind turbine.

Due to the developments of the semiconductor devices in power electronics, the number of applications has been increasing [3]. At the same time the cost of the switching devices are continuously reducing and the size, weight or volume of the switching components used in a particular drive are continuously reducing. In [3] the development of power semiconductor devices is shown.

Wind turbine designs can be classified as four types. In the earlier days wind energy conversion means capturing the wind power with the help of a constant speed squirrel cage induction generator. Then there is no separate control mechanism is required to integrate the system to grid. But to capture the maximum of available wind energy, partial variable speed wind turbine with variable rotor resistance was implemented. But the sped variation is only within 10%. So variable speed wind turbine is preferred. Here a partial scale power converter in rotor side can be used. Full rating power converter performs reactive power compensation and a smooth grid connection for the entire speed

range. Variable speed wind conversion system is more efficient than the fixed speed system.

The permanent magnet synchronous generator (PMSG) is gaining interest from the manufacturers and it is used in large capacity (MW) wind conversion systems. Due to the absence of field winding, field loss is less. PMSG has high power to weight ratio and high efficiency. No separate exciter machines are required for PMSG. PMSG rotors are easy to manufacture with large number of poles required for low speed direct drive wind system. PMSG can be either installed directly with no gear box or associated to a gear box, which results in a decrease of maintenance costs and decrease of noise level. So the PMSG based wind energy conversion system is considered in this paper for the review of matrix converters.

Out of the different power converter topologies available for wind turbines, bi-directional back to back two level power converters is the dominant one. But the high value DC link capacitor is bulky and heavy [3]. It increases the cost and reduces the life time of the system unidirectional power converter, multi level power converter and modular power converters are the other major topologies discussed in [3]. In multi level converter topologies five types of connections including three level diode clamped converter is discussed. In modular power converters several paralleled power converters is connected in between the utility grid and wind generator.

The matrix converter is a forced commutated converter which uses an array of m x n switches which converts an m phase input voltage to an n phase output voltage with variable amplitude and frequency. It does not have any DC link circuit and does not need any large energy storage elements as it is a direct AC-AC converter.

Firstly the fundamentals and historical view of matrix converter is presented in this paper. Different matrix converters for PMSG based wind energy conversion systems are explained. Also modulation techniques and control strategies will be presented.

2. Fundamentals of matrix converters

The matrix converter provides direct AC-AC conversion and it is considered as an emerging alternative to the conventional two stage AC-DC-AC converter topology. The bidirectional switches for matrix converters were implemented by the power transistors or IGBT or MOSFETs. The development of matrix converters starts with the work of Venturini and Alesina in 1980. Actually they present this matrix arrangement of bi directional switches. Venturini formulate the equations for the switching operation in the

form of matrix. The matrix elements are the switching patterns defined in time. Matrix is a low frequency modulation matrix. Another type of matrix converter based on a "fictitious DC link" was presented by Rodriguez in 1983. By using a PWM technique each switch is switched between the most positive and most negative input lines. This is known as indirect transfer function approach. In 1983 Braun and in 1985 Kastner and Rodriguez [4] introduce the space vector modulation technique for matrix converters. Matrix converters with nine switches can be effectively used in vector control of induction motor with sinusoidal currents. This is confirmed in 1985 by Kastner and Rodriguez and in 1992 by Neft and Schauder.

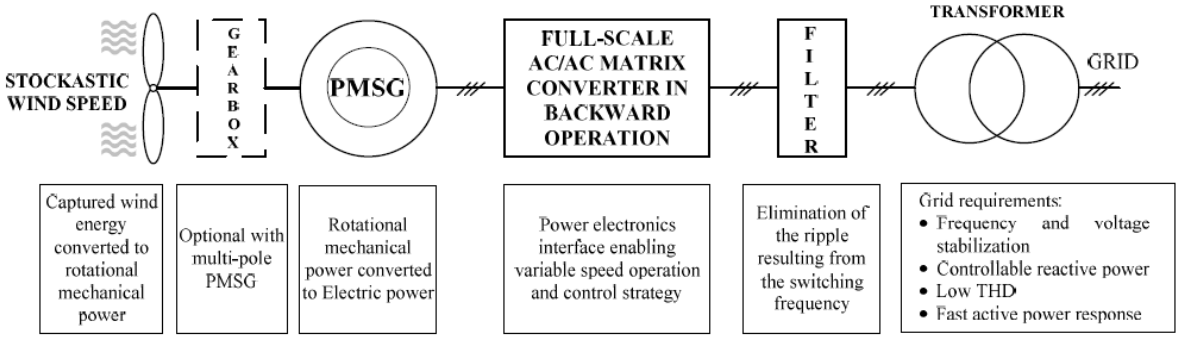

Figure1: Basic concept of the wind generation system based on the PMSG and MC combination [2]

Simultaneous commutation of controlled bi-directional switch is a great challenge. No two switches in one output phase will be shorted during the commutation as it will lead to the short circuit of input lines. Similarly the open circuiting of all switches in one output phase should be avoided as it will cause the discontinuous current conduction for the load. Several advantages of matrix converter include the absence of heavy DC link capacitor, sinusoidal input current and output voltage, variable frequency operation, unity input power factor etc.. But yet the matrix converter cannot found its own place in industry. This is due to the complexity in commutation technique. As the output voltage is considered as the average value in several switching intervals, the voltage gain is also reduced. Formation of high rated bi directional switch is also creates problems. Lack of decoupling between the two AC sides of the converter is also considered as a drawback.

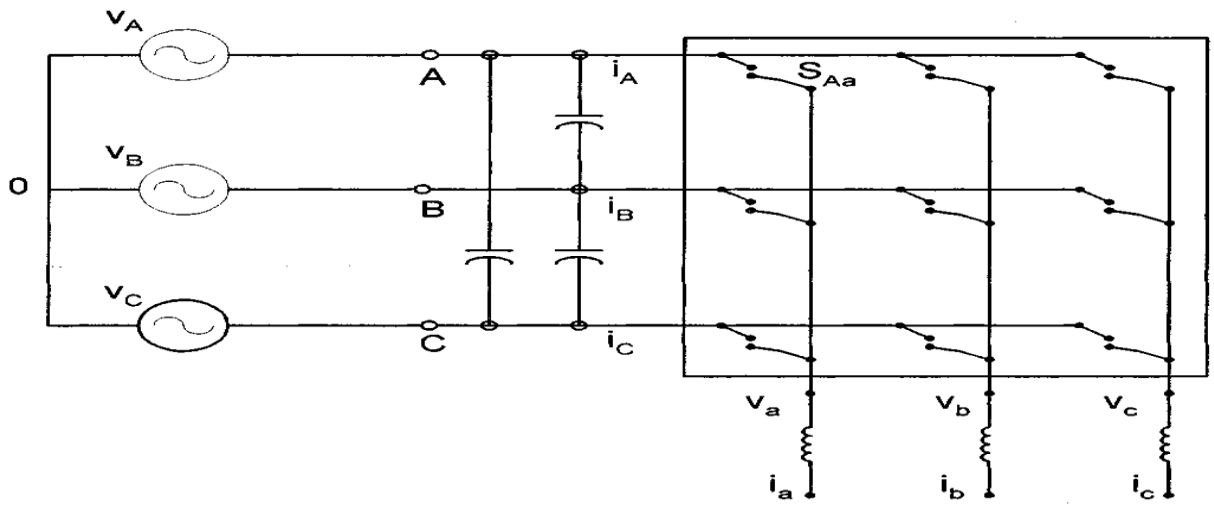

Figure 2: Simplified circuit of a 3 x 3 matrix converter [4]

3. Matrix converters for PMSG based wind energy conversion system

The basic matrix configuration is the three phase to three phase, with nine bi directional switches. Variation from this configuration is the Indirect and Sparse matrix converters were developed to reduce the number of power transistors and to reduce the cost and increase the efficiency of the converter. Reduced matrix converters, and Three phase to single phase matrix converters are the recent advancement in the field of power converters for wind systems.

1. Conventional Three phase to Three phase Matrix Converters

The topology of conventional matrix converter is shown in figure 3. The LC filter on output side is used to filter the output voltage. A protection circuit is used in between the output lines and PMSG terminals. As the DC link capacitor is avoided in this topology, size can be considerably reduced which is the main constraint in the wind conversion system. Many MPPT based control strategies can also applied in conventional matrix converter, which is explained later is section V.

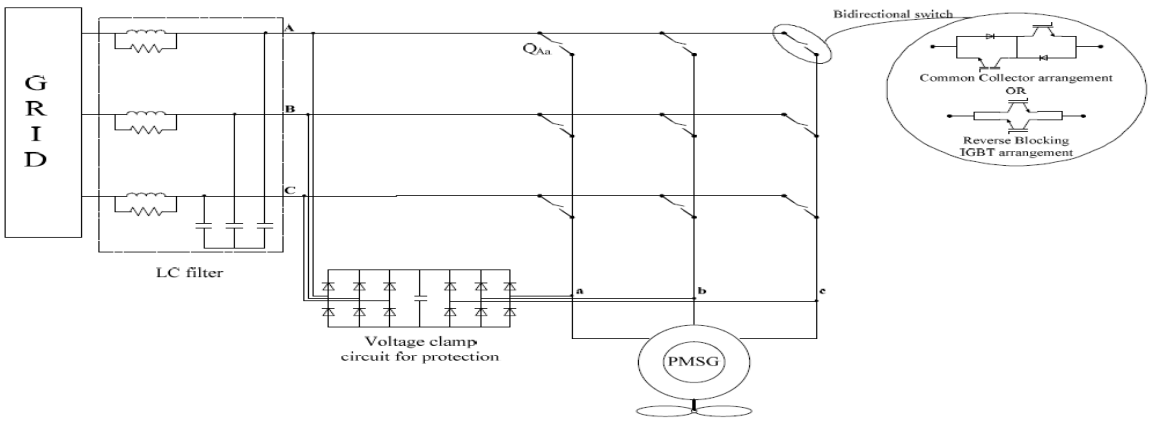

Figure3: The conventional matrix converter topology connected to a PMSG wind turbine [2]

2. Sparse Matrix Converter

Sparse matrix converters are two stage versions of the conventional matrix converter with reduced number of power transistors and also no passive components. There are 3 configurations of Sparse matrix converters are available, Sparse matrix converter [11], Very Sparse Matrix Converters and Ultra – Sparse Matrix Converters. These converters have its own advantages like high voltage gain as shown in Table 1. Thus the size and cost of converters, complexity in control algorithm reduced. Switching losses is also considerably reduced.

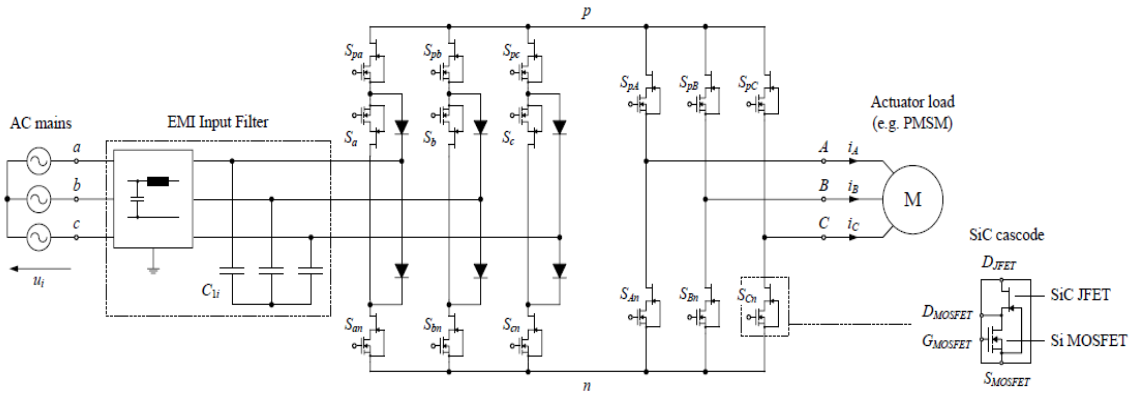

Figure 4: Power circuit of the SiC Sparse Matrix Converter [11]

Very Sparse matrix converters have an interesting fact that it can be utilized directly without any gear connection. Ultra Sparse matrix converter is associated with a Quasi Z source network connected in between the three switch input rectifier and the output six – switch inverter stage in order to increase the voltage gain limited to 0.866 so far in all matrix converter topologies.

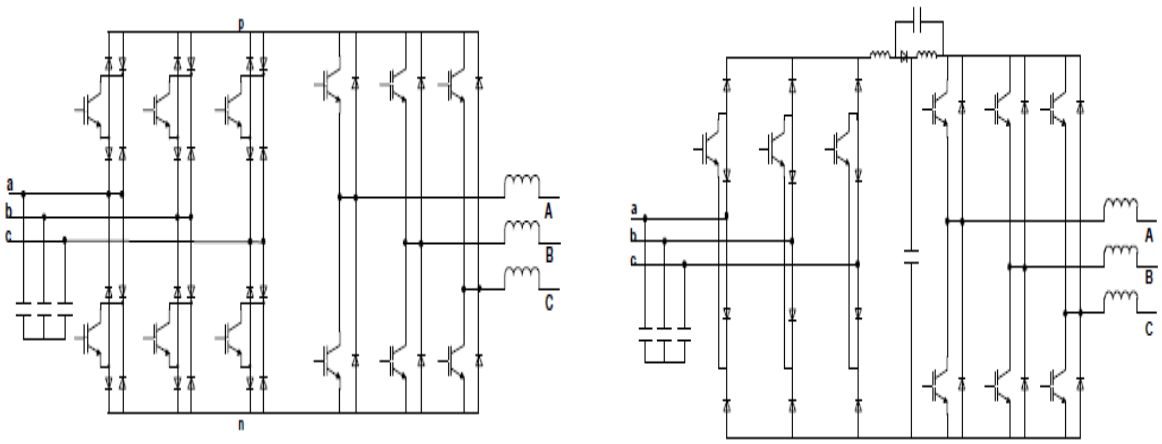

Figure 5: (a) Very Sparse Matrix Converter (b) Quasi Z-source Ultra-Sparse Converter [2]

Table 1. Major characteristics of 3-phase to 3-phase matrix converters applied to PMSG-based wind conversion systems [2]

	No of transistors	Power flow direction	simulated ontrol scheme for PMSG-Matrix wind turbine	Power rating	Voltage gain and particular limitations
Conventional Matrix Converter	18	Bidirectional	Adaptive nonlinear backstepping approach and space vector modulation	Simulation 1KW	0.866
			Singular value decomposition modulation and simple adaptive controller	50 KVA	
			Optimal PID control based on particle swarn optimization algorithm	Residential wind turbines	
			PI control and space vector modulation	7.5 KW	
Very Sparse Matrix Converter	12	Bidirectional	Motoring-generating controller, space vector modulation and field oriented control	5.7 KW	0.866
			Soft-switching hysteresis current control, space vector modulation and field oriented control	2.5 MW	
Ultra Sparse Matrix Converter with Z-Source Network	9	Unidirectional	Space vector rectification and space vector inversion	Residential wind turbines	Voltage gain > 1 and Input current displacement range of $\pi/6$

3. Three phase to single phase matrix converter

The three phase to single phase matrix convertor has six bi-directional switches and so it is more compact design and its modulation technique is more simple. But it found application in direct – drive residential wind turbines. Researches were now going on to find its use in high power applications. The reduced matrix converter topology is derived

from single phase matrix converter but with a different operation concept. Reduced matrix converter is applied in off shore wind farms based on HVDC transmission. Reduced matrix converter is more efficient and has high power density than 3 AC-AC back to back converter.

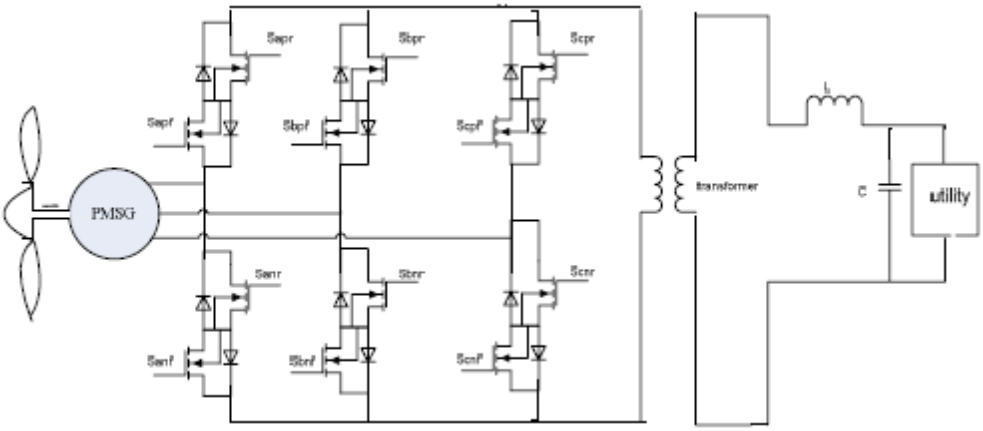

Figure 6: Three phase to Single phase Matrix Converter [1]

4. Modulation Techniques

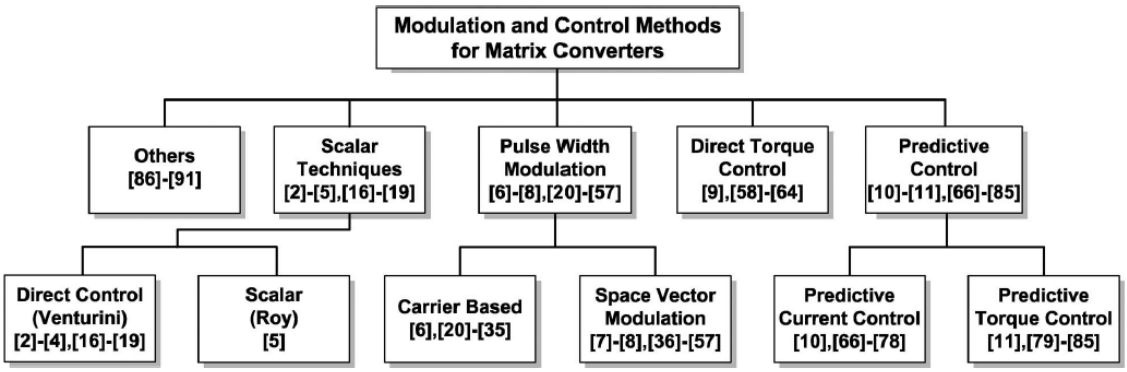

Figure 7: Summary of modulation and control methods for Matrix converters [6]

As the matrix converter is made of bi-directional power switches, switching function defined on time is required for the proper operation of the converter. These functions known as modulation techniques are designed for each switch in such a way that the voltages and the current at both sides of the converter become sinusoidal. Pulse width modulation (PWM) techniques are the most popular in PMSG based wind systems. In this control strategy, the space vector modulation method is more used than carrier based modulation method. Different algorithms were applied to space vector modulation in order to reduce the switching losses and to minimize the output current distortion by optimizing the use of zero vectors. Different modulation and control methods were listed and discussed in [6]. Direct method proposed by Venturini, Roy's method and current phase displacement control are the scalar

techniques for modulation of matrix converters. Pulse width modulation method consists of carrier –based modulation and space vector modulation are PWM methods used for matrix converter. The gate pulse pattern generation of the MC is given according to a switching state selector generated by the equation

$N=16x_A+8x_B+4x_C+2L_1+L_0$ ---------- (1)

Where L_0 and L_1 are the output voltage levels. In SVM method, the duty cycles are calculated based on the phase of output voltage and input current vector references.

5. Control Strategies

Control strategies of the matrix converter include Direct Torque Control and Predictive Control methods. The Direct Torque Control (DTC) uses the Hysteresis comparator to control the torque T_e which delivers the control variable C_T. An additional hysteresis controller is used to control the flux. A third control loop is used to control the power factor of the input current by controlling the displacement factor ΔØ.

Predictive control methods include Predictive Current Control and Predictive Torque Control methods.The future behavior of load currents and reactive power is predicted by the converter and load models. To meet this future current the different bi-directional switches were turn ON/OFF for finite duration. Predictive Torque Control consists of choosing, at fixed sampling intervals, one of the 27 feasible switching states of the DMC. A quality function minimization technique is used for the selection of switching state [6].

MPPT based control strategies of PMSG –Matrix Wind turbines

The output power of the wind turbine depends on the density of air, and velocity of wind. Power capturing of the turbine can be maximized by adjusting the speed of turbine to the Maximum Power Point of the turbine. The power coefficient Cp of the turbine depends on the turbine blade angle Θ and tip speed ratio λ. To maximize the power output of the turbine, turbine should operate at the MPP on Cp- λ graph [5]. To detect the MPP on each instant different algorithm were presented in [5]. They include the usual Perturbation and Observation method, beta-MPP method and Anemometer method. Out of this , beta-MPP method takes less time to reach MPP , and it increase the power capturing. This MPPT control algorithm can't be used for standalone type wind turbine systems. Soft –switching hysteresis current control, Potential intelligent control method like Fuzzy PI observer etc are the other control strategies listed in [2].

6. Conclusion

Recently Matrix converter and PMSG have received considerable attention in wind generation application. PMSG based wind systems with three phase to Single Phase matrix converter can be used in residential buildings, in which no gear box assembly is required. Thus localized power generation can be increased and thereby reducing the dependency on grid. New PMSG compact topologies and control strategies were under research. By using more compact processors and high frequency high voltage semiconductor switches, the matrix converter can become a dominant technology in wind energy conversion systems. But from the industry the complaint regarding the matrix converter is its low voltage gain and complex control algorithm. Promising researches were going on to overcome these drawbacks.

7. Reference

[1] Guoliang Yang, and Yanping Zhu "Application of a Matrix Converter for PMSG Wind Turbine Generation System", 2nd IEEE international symposium on power electronics for distributed generation system. page 185-189, 2010

[2] Catherine Nasr El-Khoury, Hadi Y. Kanaan, Imad Mougharbel and Kamal Al-Haddad "A Review of Matrix Converters Applied to PMSG Based Wind Energy Conversion Systems".IEEE transaction,2013

[3] Florin Iov, Senior Member IEEE, Frede Blaabjerg, Fellow IEEE, "Power Electronics and Control for Wind Power Systems" , IEEE Transaction, 2009

[4] PatrickW. Wheeler, *Member, IEEE*, José Rodríguez, *Senior Member, IEEE*, Jon C. Clare, *Member, IEEE*,Lee Empringham, *Member, IEEE*, and Alejandro Weinstein "Matrix Converters: A Technology Review", IEEE Transactions On Industrial Electronics, Vol. 49, No. 2, April 2002.

[5] V. Agarwal, R. K. Aggrawal, P. Patidar and C. Patki, "A novel scheme for rapid tracking of maximum power point in wind energy generation systems", IEEE Trans. Energy Conversion.,vol. 25, no. 1, pp. 228-236, March 2010.

[6] J. Rodriguez, M. Rivera, J. W. Kolar and P. W. Wheeler, "A review of control and modulation methods for matrix converters", IEEE Trans. Ind. Electron., vol. 59, no. 1, pp. 58-70, January 2012.

[7] D.casadei,G.Grandi,G.serra,A.Tani "Space vector control of Matrix converters with unity input power factor and sinusoidal input/output waveforms", Paper presented in the European power electronics association 1993.

[8] Ebubekir Erdem, Yetkin Tatar, and Sedat Sünter "Modeling and Simulation of Matrix Converter Using Space Vector Control Algorithm", Serbia & Montenegro, Belgrade, November 22-24, EUROCON 2005

[9] J. Vadillo, J. M. Echeverria, A. Galarza and L. Fontan "Modelling and Simulation of Space Vector Modulation Techniques for Matrix Converters:Analysis of different Switching Strategies" IEEE transaction page 1299-1304.

[10] Florent Morel, Jean-Marie Rétif, Xuefang Lin-Shi, Bruno Allard, Pascal Bevilacqua "A Predictive Control for a Matrix Converter-Fed Permanent Magnet Synchronous Machine", IEEE transaction on 2008.

[11] T. Friedli, S. D. Round and J. W. Kolar, "A 100 kHz SiC SparseMatrix Converter", in Proc. IEEE Power Electronics Specialists Conference (PESC), June 2007

An Online UPS Scheme with Line–side Power Factor Correction

Sajin Babu[1], Smitha N.P.[2]

Department of Electrical & Electronics Engineering, Sree Narayana Gurukulam College of Engineering Kadayiruppu, Ernakulam Dist., Kerala, India.

[1]sajinbabuanjilath@gmail.com

[2]smithanpjobs@yahoo.com

Abstract

Developments in various localized power generation schemes enabling direct participation of consumers in generation and distribution of electrical power is one of the main essentialities for the promotion of micro-grid systems. This paper explores the potentialities of medium and large power rated online UPS systems to function as power conditioning devices, through reactive power compensation methods. The UPS inverter along with its coupled battery bank can serve for power factor compensation and harmonic mitigation during the off-load hours, with a suitable control algorithm. The improvement of power factor to desired level in the supply mains line to which it is connected, is targeted here by developing algorithms to independently regulate the distortion factor and the displacement factor of the supply line currents.

Key words: ***Reactive Power Compensation, P-Q Theory, Shunt Active Filter, Online UPS***

1. Introduction

With the advent of power electronics the scope of controlling and regulating real and reactive power in the electrical power transmission sector has improved considerably. Every year witnesses the development of new advanced and efficient power circuitry configurations along with various control algorithms. Most of them are designed to operate from the power utility company end and also under high voltage conditions, owing to reasons associated monitoring, controlling, safety and economy. However, the micro-grid systems grid are gaining popularity with the perspective of consumers participating in power generation, and thereby reducing the gap between growing demand and insufficient supply of electrical power.

The electrical power sector in India and other developing countries will take a revolutionary reformation in the near decades with micro-grids becoming an integral part of this sector. Decentralized and distributed power generation is the highlighted concept of the micro-grid systems, by which consumers can participate in power production and power conditioning.

Power conditioning is an economically potential aspect that can be adopted by the medium and large power consumers. The consumers can facilitate reactive power compensation to the utility grid or the neighboring micro-grids.

To minimize investment on additional equipment for conditioning the power delivered by local consumers, it is advised that certain power electronic loads like UPS, inverters etc. can be redesigned to incorporate power conditioning functionality in them, while performing their normal tasks. This thesis proposes the incorporation of reactive power compensation functionality for conventional online UPS scheme for medium and large power applications. The primary aim is to develop an advanced and efficient control algorithm for online UPS with minimum hardware additions in the power circuitry.

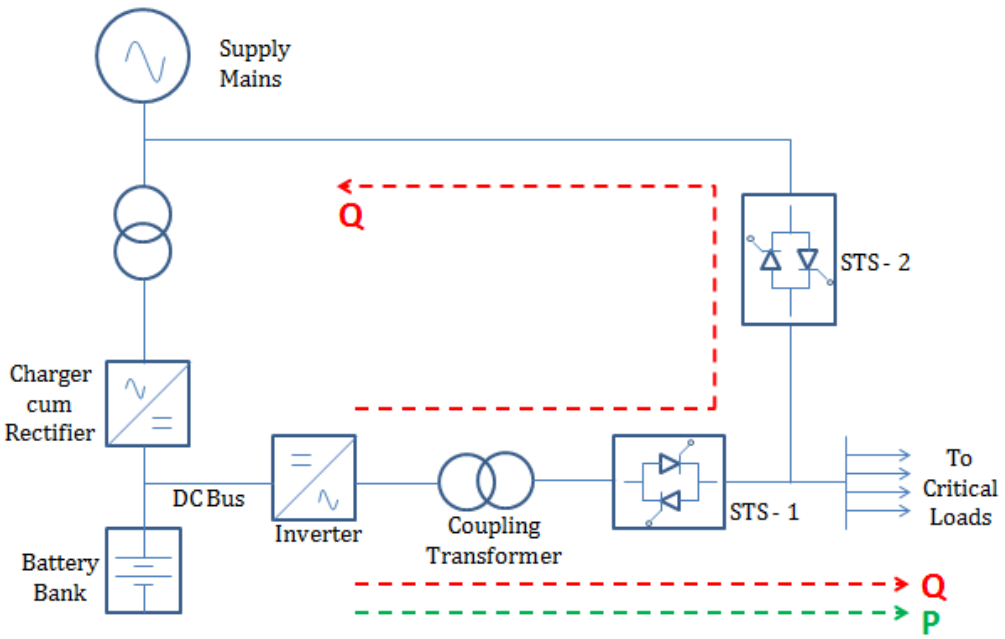

Fig.1. Power schematic of a typical Online UPS

The schematic of a typical online UPS system is shown in fig.1. The normal mode of operation of this scheme UPS is that the inverter feeds the load with conditioned supply power, both in times of supply availability and supply outage. During supply outage state, the inverter draws power from the battery bank attached to its DC bus. In case of any contingency or inverter failure, the power from the supply

mains can be bypassed to the load directly by turning on STS-2, which was earlier in normally OFF mode. Since the operation of STS-1 and STS-2 are complementary, the former will be turned OFF during this state.

In many applications, the battery bank of the UPS system is in floating state for most of the time in a day of its operation. That is, except in cases of supply outages, the battery bank remains fully charged. Without any major power circuitry changes, the above configuration in fig.1. can be effectively used to supply reactive power compensation in the supply mains during the off-load hours of the UPS operation schedule. The Contingency Supply Path (SPS) of the UPS scheme can be used for this purpose. The idea presented here is similar to that of a STATCOM functionality incorporated for conventional online UPS systems.

Most importantly, the added advantage of reactive power is that it can be injected to the supply line without lowering the battery's state of charge (SOC). A very small amount of real power will be lost during this reactive power transaction process, so the battery bank will have to supplement the difference. However, for such a small amount of real power loss, the net reduction in the state of charge of the individual batteries will be negligible. Therefore, only a centralized controller will be needed to make this idea a reality.

In the proposed control circuitry to operate the online UPS as shunt compensation device, the overall objective is to improve the Power Factor in the supply mains line to which it is connected [1]. However, in our present power system affected with harmonics, the power factor can be improved in two aspects, viz., (i) by improving Distortion Factor and (ii) by improving Displacement Factor. The former can be achieved by eliminating the harmonics in the supply line current in the upstream of the point of UPS connection. The latter can be achieved by correcting the phase angle of the supply current so as to attain the desired level of Power Factor.

Each algorithm operates in parallel and in synchronism to generate their respective sets of reference currents. The resultant of these reference currents will be passed through a pulse generation block employing a suitable current control technique, say, the Hysterisis Current Control. The UPS invereter is thus driven from the pulses corresponding to these reference currents and will generate the desired compensation current at its output. This is shown in fig. 2.

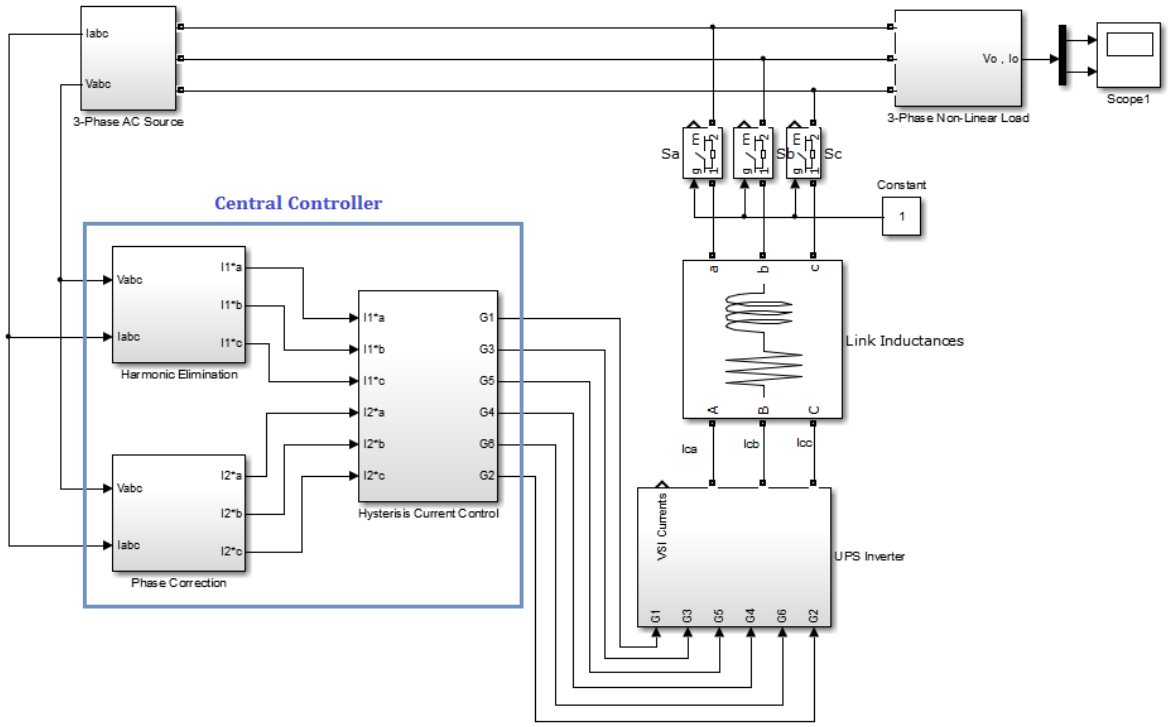

Fig. 2. Overall Power Conditioning Circuit along with Central Controller

2. Correction of Distortion Factor

In 1983, H. Akagi have proposed the "The Generalized Theory of the Instantaneous Reactive Power in Three-Phase Circuits", also known as Instantaneous Power Theory , or p- q Theory [2]. It is based on instantaneous values in three-phase power systems with or without neutral wire, and is valid for steady-state or transitory operations, as well as for generic voltage and current waveforms. The p-q theory consists of an algebraic transformation (Clarke transformation) of the three-phase voltages and currents in the *a-b-c* coordinates to the *α-β-0* coordinates, followed by the calculation of the p-q theory instantaneous power components:

$$\begin{bmatrix} v_0 \\ v_\alpha \\ v_\beta \end{bmatrix} = \sqrt{\frac{2}{3}} \cdot \begin{bmatrix} 1/\sqrt{2} & 1/\sqrt{2} & 1/\sqrt{2} \\ 1 & -1/2 & -1/2 \\ 0 & \sqrt{3}/2 & -\sqrt{3}/2 \end{bmatrix} \cdot \begin{bmatrix} v_a \\ v_b \\ v_c \end{bmatrix}$$

$$\begin{bmatrix} i_0 \\ i_\alpha \\ i_\beta \end{bmatrix} = \sqrt{\frac{2}{3}} \cdot \begin{bmatrix} 1/\sqrt{2} & 1/\sqrt{2} & 1/\sqrt{2} \\ 1 & -1/2 & -1/2 \\ 0 & \sqrt{3}/2 & -\sqrt{3}/2 \end{bmatrix} \cdot \begin{bmatrix} i_a \\ i_b \\ i_c \end{bmatrix} \qquad \text{..... (1)}$$

$p_0 = v_0 \cdot i_0$ Instantaneous zero-sequence power ……. (2)

$p = v_\alpha \cdot i_\alpha + v_\beta \cdot i_\beta$ Instantaneous real power …….. (3)

$q \equiv v_\alpha \cdot i_\beta - v_\beta \cdot i_\alpha$ Instantaneous imaginary power …..... (4)

The power components p and q are related to the same α-β voltages and currents, and can be written together:

$$\begin{bmatrix} p \\ q \end{bmatrix} = \begin{bmatrix} v_\alpha & v_\beta \\ -v_\beta & v_\alpha \end{bmatrix} \cdot \begin{bmatrix} i_\alpha \\ i_\beta \end{bmatrix} \qquad \text{…… …….. (5)}$$

To calculate the reference compensation currents in the α-β coordinates, the expression (5) is inverted, and the powers $(\tilde{p} - \bar{p}_0 \text{ and } q)$ to be compensated are used:

$$\begin{bmatrix} i_{c\alpha}{}^* \\ i_{c\beta}{}^* \end{bmatrix} = \frac{1}{v_\alpha{}^2 + v_\beta{}^2} \cdot \begin{bmatrix} v_\alpha & -v_\beta \\ v_\beta & v_\alpha \end{bmatrix} \cdot \begin{bmatrix} \tilde{p} - \bar{p}_0 \\ q \end{bmatrix} \qquad \text{…….. (6)}$$

Since the zero-sequence current must be compensated, the reference compensation current in the *0* coordinate is i_0 itself:

$$i_{c0}{}^* = i_0 \qquad \text{……. (7)}$$

In order to obtain the reference compensation currents in the *a-b-c* coordinates the inverse of the transformation given in expression (1) is applied:

$$\begin{bmatrix} i_{ca}{}^* \\ i_{cb}{}^* \\ i_{cc}{}^* \end{bmatrix} = \sqrt{\frac{2}{3}} \cdot \begin{bmatrix} 1/\sqrt{2} & 1 & 0 \\ 1/\sqrt{2} & -1/2 & \sqrt{3}/2 \\ 1/\sqrt{2} & -1/2 & -\sqrt{3}/2 \end{bmatrix} \cdot \begin{bmatrix} i_{c0}{}^* \\ i_{c\alpha}{}^* \\ i_{c\beta}{}^* \end{bmatrix} \qquad \text{……. (8)}$$

$$i_{cn}{}^* = -(i_{ca}{}^* + i_{cb}{}^* + i_{cc}{}^*)$$

The calculations presented so far are synthesized in fig.3. and correspond to a shunt active filter control strategy.

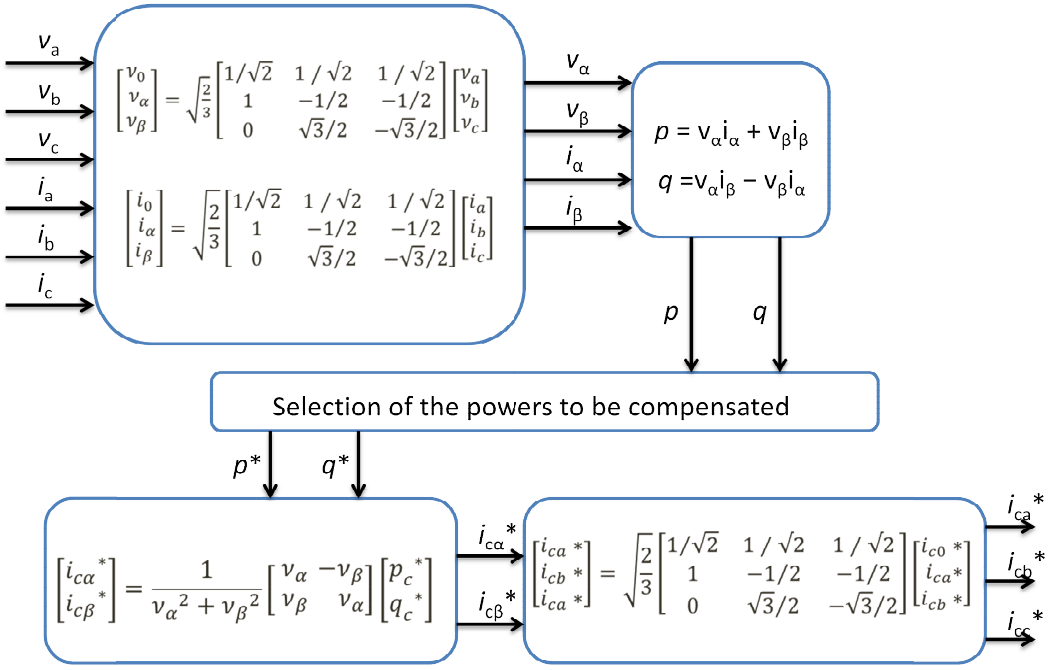

Fig. 3. Overall control strategy for harmonic elimination using instantaneous p-q theory.

3. Correction of Displacement Factor

The references for the Displacement Factor correction block are the line current and the reference power factor value (the desired value of power factor). The magnitude of the fundamental component of the measured line current $\mathbf{i_{La}}$ and its phase angle is calculated in the first stage. The calculated phase angle is then compared with the synchronizing angle $\boldsymbol{\varphi}$ and the difference angle $\boldsymbol{\theta}$ hence produced is used to obtain the current value of reactive component of the line current. A reactive component signal corresponding to the desired value of power factor is compared with this current value of reactive component signal to produce the error signal. This error signal $\mathbf{I_R}$ refers to the amount of reactive power exchange required to achieve the desired level of power factor improvement.

Fig. 4. shows the control algorithm to generate the set of reference currents for improving the displacement factor.

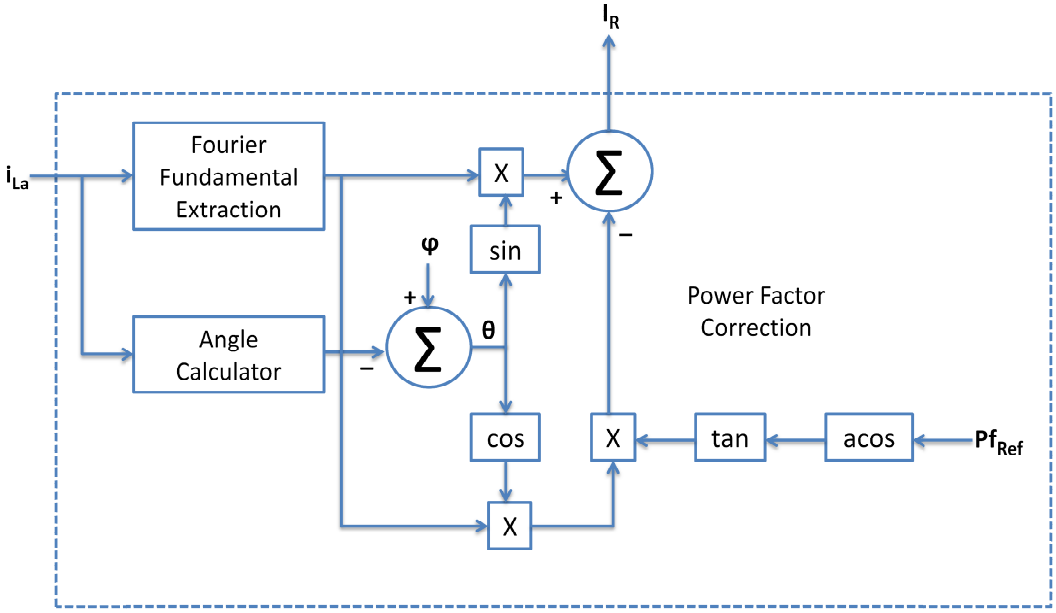

Fig.4. Power Factor Correction block of the Control Circuit.

4. Development of SIMULINK models

The SIMULNIK model developed for the harmonic elimination algorithm is shown in Fig. 5. The set of reference currents generated from this algorithm is used to correct the Distortion Factor.

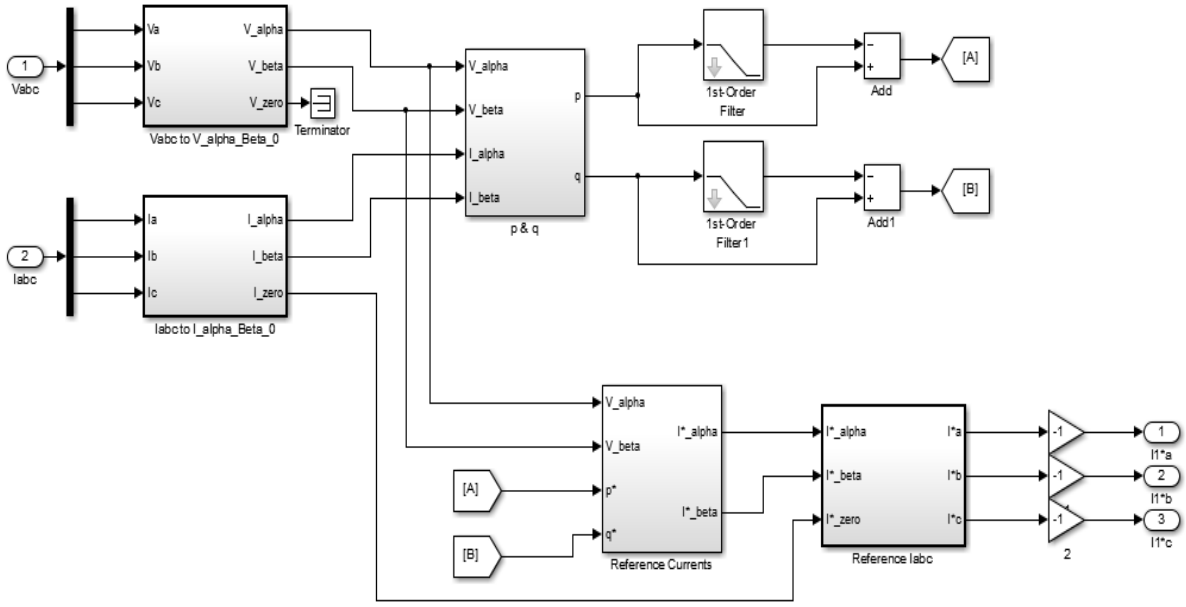

Fig. 5. Developed SIMULINK model for correction of Distortion Factor of the supply line currents.

The SIMULNIK model developed for the harmonic elimination algorithm is shown in Fig. 6. The set of reference currents generated from this algorithm is used to correct the Distortion Factor.

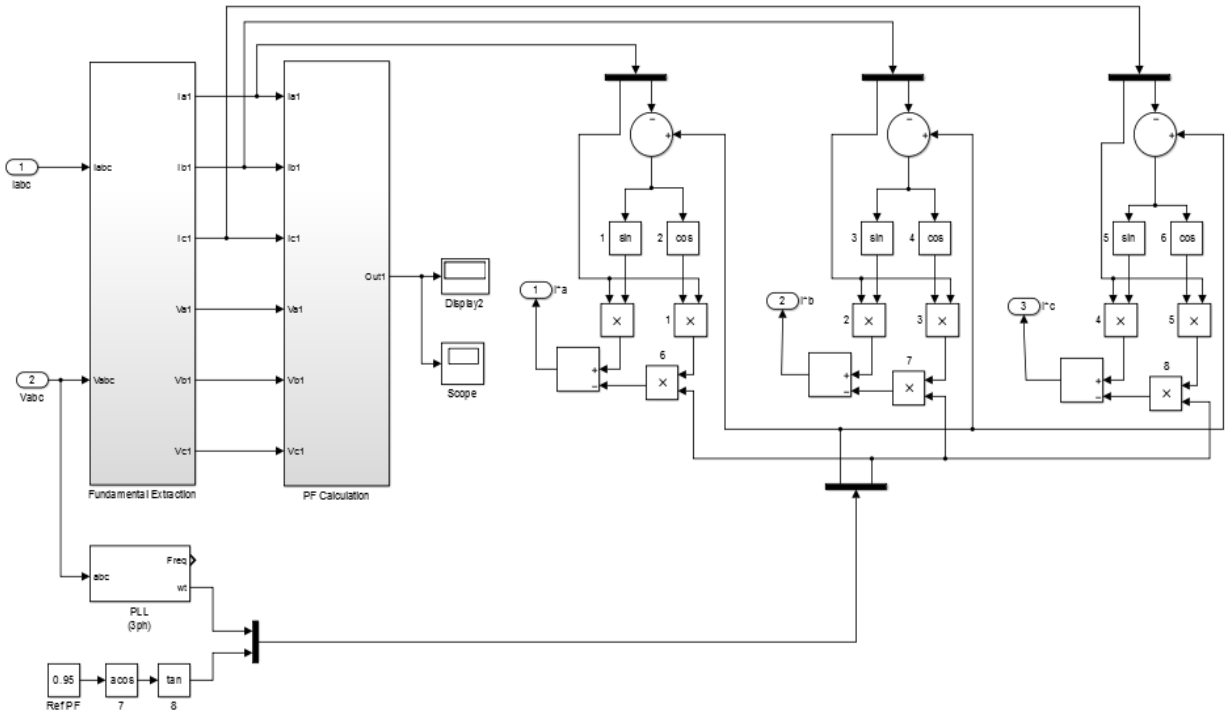

Fig. 6. Developed SIMULINK model for correction of Distortion Factor of the supply line currents.

5. Simulation Results

The simulation output of the resultant reference currents generated is displayed in Fig. 7.

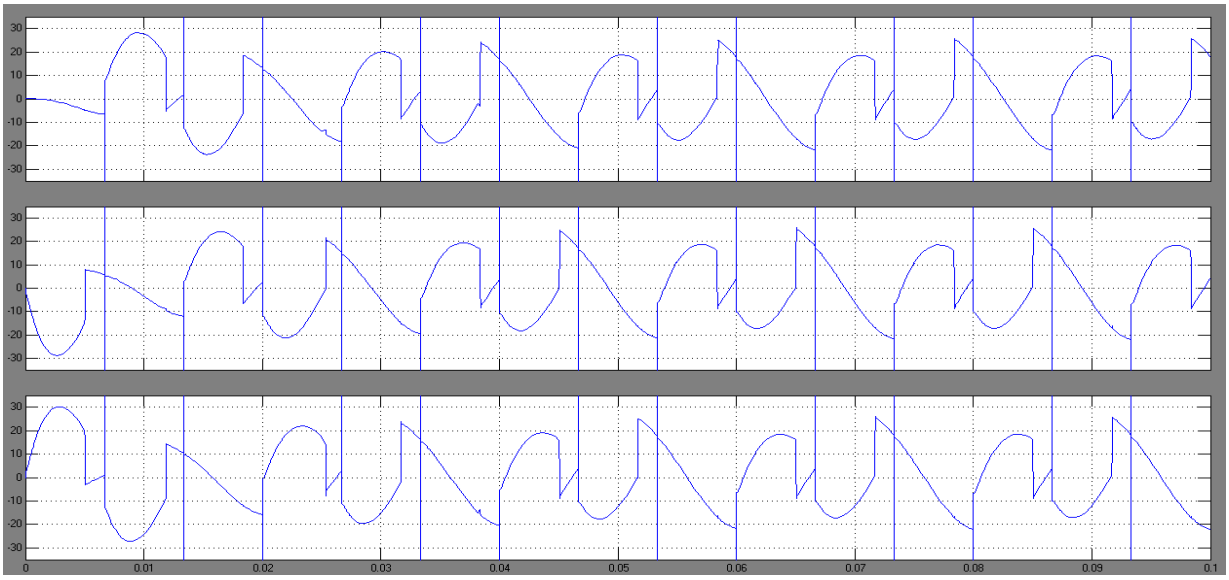

Fig. 7. Simulation output showing the generated reference currents for Power Factor correction.

The simulation output showing supply line currents before conditioning (top 3) and after conditioning (bottom 3) are displayed in Fig. 8.

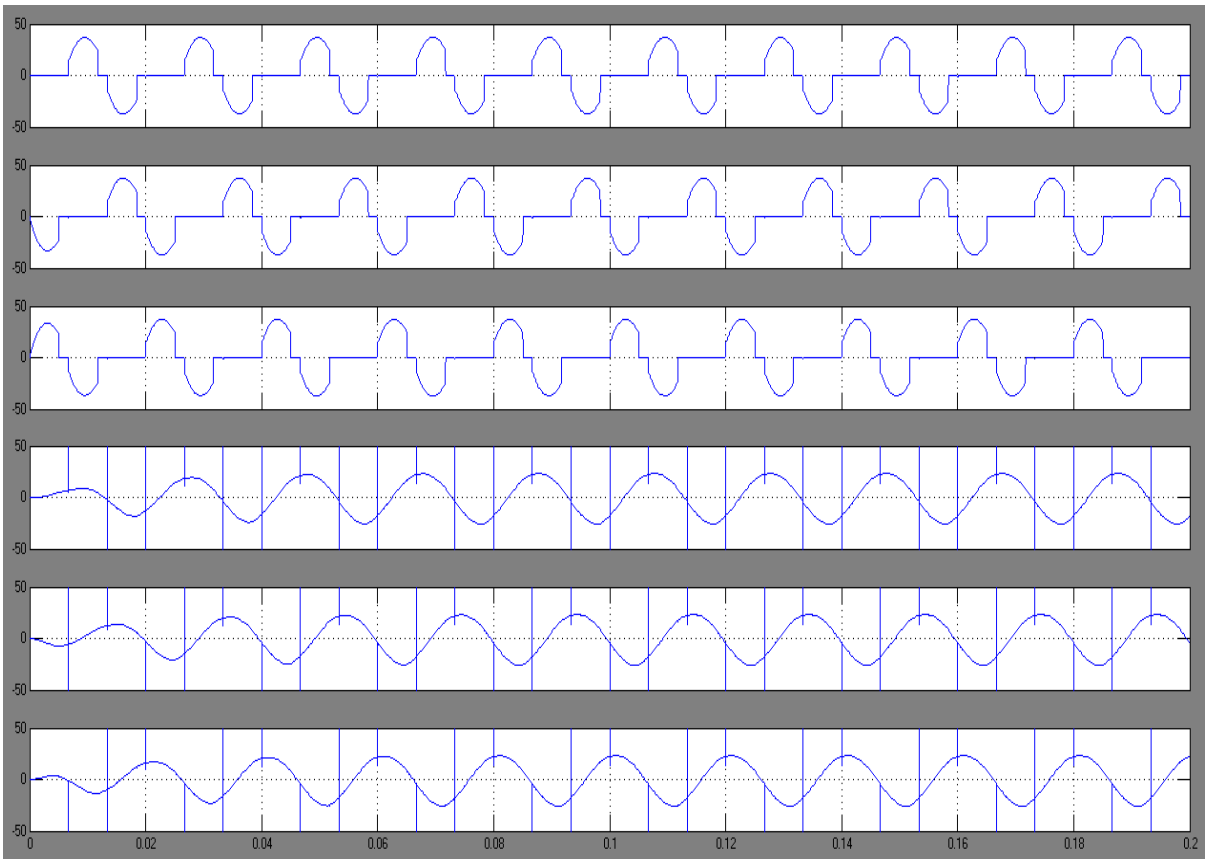

Fig. 8. Simulation output showing the supply line currents in the three phases before power conditioning and after conditioning.

The respective improvement in the power factor is evident from the improvement in the THD value. This is shown below in fig.9.

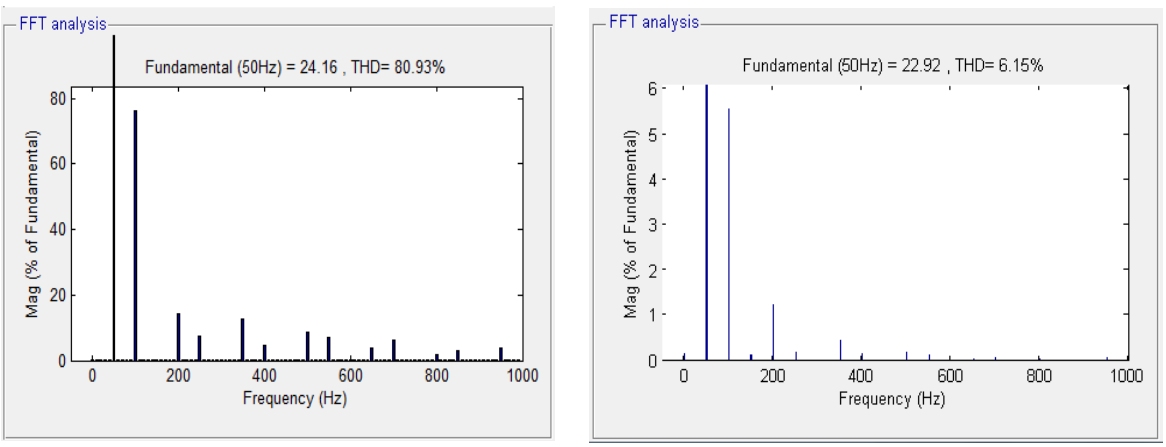

Fig. 9. THD analysis of the supply line cuurents showing the improvement in Power Factor.

4. Conclusion

The greater possibilities for shunt active compensation using online UPS configured with sufficient charge storage banks are explored in this paper. These proposals can be incorporated with medium and large power UPS systems so as to increase their utilization in an effective manner. This will invite financial credits for the consumer employing such a scheme from the utility company. The proposed algorithms have been developed ensuring minimal power circuitry hardware additions, so that the investment for the proposed system will remain within its economic viability.

Reference

[1] A. Chandra, B. Singh, B. N. Singh, and K. Al-Haddad, "An improved control algorithm of shunt active filter for voltage regulation, harmonic elimination, power-factor correction, and balancing of nonlinear loads," *IEEE Trans. Power Electron.*, vol. 15, no. 3, pp. 495–506, May 2000.

[2] V. Soares, , Verdelho, P., and G.D. Marques, "An instantaneous active and reactive current component method for active filters," IEEE Transactions Power Electronics, Vol. 15, No. 4, pp. 660 669, July 2000.

[3] T. Zaveri, B.R.Bhalja, and N. Zaveri,."A novel approach of reference current generation for power quality improvement in three-phase , three- wire distribution system using DSTATCOM," International Journal of Electrical Power and Energy systems, Vol.33,Issue -10., December-2011, pp.1702-1710.

[4] Paulo Vitor Silva, Ricardo Ferreira, Pinheiro, Marcos V. Aguiar, Luciano P. Júnior, Andrés Ortiz Salazar, Caio D. Cunha; "Implementation of a shunt active filter using the theory of Generalized instantaneous power", Published: 2012 IEEE.

STATCOM BASED POWER QUALITY IMPROVEMENT FOR GRID CONNECTED WIND-SOLAR HYBRID ENERGY SYSTEM

Vimal.P[1], Eswaran Namboothiri[2], Suresh.T[3] , Santhosh Kumar K.B[4]

Department of Electrical and Electronics Engineering, Karpagam University, Coimbatore, Tamilnadu.

Instructor.Gr.II[1], Department of Instrumentation and Control Engineering,

Tradesman(H.G)[2] ,Instructor.Gr.II[3],Trade Instructor.Gr.II[2] , Department of Electrical and Electronics Engineering , N.S.S. College of Engineering , Palakkad, Kerala

vmlpalayil@gmail.com[1], e_namboothiri@yahoo.com[2], sureshtnedumudy@gmail.com[3], santhoshnairkoloor@gmail.com[4]

Abstract

To maintain the power quality is the challenging job. There are lots of causes which will affect the quality of power. It may be at generation, transmission, distribution and utilization. To meet the increased power demand hybrid energy systems are used but which leads to power quality issues. Harmonic distortion is the most prominent power quality problem when a wind generator and a solar energy system are connected to the grid.This paper deals with power quality improvement for grid connected wind-solar hybrid system. In this scheme the STATic synchronous COMPensator (STATCOM) connected to the Point of Common Coupling (PCC) will mitigated the power quality problems.This proposed scheme can be applied for unbalanced non-linear loads

Key words: ***Power Quality, Hybrid Energy System, Harmonic Distortion, International Electro-Technical Commision Standard, STATCOM***

1.Introduction

Power quality is generally defined as generation and maintenance of voltage and frequency which the entire power system designed to operate.

To maintain the quality of power from the generation to the utility end is always a challenging job. To meet the increased demand of power the incorporation of various non conventional energy resources are inevitable . But this introduces more problem to the quality of the power and again it makes the job more complicated one.

2.Power quality problems

The power quality problems in the power systems are generally voltage sag, voltage swell, over voltage, under voltage, interruption, harmonics etc..

2.1 The main power quality problems in the grid

i. Voltage drops

ii. Voltage fluctuation

iii. Harmonics

iv. Noise

In which harmonics is the most important one.

Harmonic distortion is defined as the voltage or current signal which have the power frequency of the multiple integer of the fundamental frequency in which the supply system is designed.

2.2 Causes of harmonics

The main cause of the harmonics is the nonlinear electrical loads. Such as rectifiers, cpu's of computers, inverters which have the power electronic devices and circuits

2.3 Effects of harmonics in grid

i. Increased currents

ii. Power losses

iii. Cables over heat

iv. Capacitor over heat

v. Equipment destructive overheat

vi. Risk of explosion

vii. Noise in operation

2.4 Power Quality Problems In Hybrid Energy Systems

A. Poor grid stability

For economic exploitation of wind energy, a reliable grid is as important as availability of strong winds. The loss of generation for want of stable grid can be 10% to 20% and this deficiency may perhaps be the main reasons for low actual energy output of WEGs compared to the predicted output in known windy areas with adequate wind data.[22]

B. Low-frequency operation

Low frequency operation affects the output of WEGs in two ways. Many WEGs do not get cut-in, when the frequency is less than 48 Hz (for standard frequency of 50 Hz) through wind conditions are favourable, with consequent loss in output [22].This deficiency apart, the output of WEGs at low frequency operation is considerably reduced, due to reduced speed of the rotor. The loss in output could be about 5 to 10% on the account of low frequency operation.

C. Impact of low power factor

WEGs fitted with induction generators need reactive power for magnetizing. Normally in conventional energy systems, generators apart from supplying active power will be supplying a reactive power. But in case of WEGs fitted with induction generators, instead of supplying reactive power to the grid, they absorb reactive power from grid, which undoubtedly is a strain on the grid. Suitable reactive power compensation [23] may be required to reduce the reactive power burden on the grid.

D. Power flow

It is to be ensured that the interconnecting transmission or distribution lines will not be over-loaded. This type of analysis is needed to ensure that the introduction of additional generation will not overload the lines and other electrical equipment. Both active and reactive power requirements should be investigated.

E. Short circuit

It is required to determine the impact of additional generation sources to the short circuit current ratings of existing electrical equipment on the network.

F. Power Quality

Fluctuations in the wind power may have direct impact on the quality of power supply. As a result, large voltage fluctuations may result in voltage variations outside the regulation limits, as well as violations on flicker and other power quality standards. Power injection from grid-connected wind turbines affects substantially the power quality. The procedures for the measurement and assessment of the main parameters involved in the power quality characteristics of a wind turbine are described in the IEC 61400-21 standard. The tests are designed to be as non-site-specific as possible, so that power quality characteristics measured with the wind turbine connected at a test site can also be considered valid at other sites. The validity of the measurement procedure is dependent upon the proper establishment of

the test conditions. The wind turbine has to be directly connected to the MV-network and the measurements of the electrical characteristics have to be made at the wind turbine terminals. It is necessary to specify the rated data of the wind turbine including rated active power of wind turbine Pn, rated apparent power Sn, nominal phase-to-phase voltage Un and the rated current In. Moreover, the location of the wind turbine terminals and the specific configuration of the assessed wind turbine including the relevant control parameter settings have to be clearly stated in the test report. According to the standard there are seven parameters compromising the required power quality characteristics of a wind turbine: voltage fluctuations or flicker; harmonics and inter harmonics; voltage drops; active power; reactive power; grid protection and reconnection time. In the following sections we will describe those parameters and the procedures specified for their measurement, stressing the most relevant issues affecting the assessment of harmonic and inter harmonic content and flicker.

2.5 Current Harmonics, Inter harmonics And Higher Frequency Components

Voltage and current harmonics are usually present on the utility network. Non-linear and electronic loads, rectifiers and inverters, are some sources which produce harmonic content.

The effects of the harmonics include overheating, faulty operation of protections, equipment failures or interferences with communication systems. The standard specifically defines different procedures to assess the harmonics, inter harmonics and higher frequency components for a wind turbine working under continuous conditions and operating with reactive power as close as possible to zero. This means that, if applicable, 548 Wind Turbines www.intechopen.com the

reactive set-point control shall be set to zero. These parameters will not be considered under switching operations since the harmonic content is not harmful enough when the duration of the perturbation is limited to a short period of time. The values of the individual current harmonics, interharmonics and higher frequency components and the Total Harmonic Current distortion (THC) must be provided in percentage of In and with the wind turbine operating within the active power bins 0, 10, 20,. . . , 100% of Pn, where 0, 10, 20,. . . , 100% are the bin midpoints. The harmonic current components

must be specified as subgrouped RMS values for frequencies up to 50 times the fundamental grid frequency.

2.5.1 Measurement of the subgrouped harmonic, interharmonic and higher frequency current components according to IEC 61000-4-7

The measurement of the harmonic current content is specified for a discrete signal obtained at a sampling rate of fs. The basic tool for the measurement is the Discrete Fourier Transform (DFT) applied over a signal window of Tw seconds (Tw · fs samples). The standard suggests the use of a rectangular window whose duration is 10 cycles of the fundamental frequency in 50 Hz systems and 12 cycles in 60 Hz systems (i.e. approximately 0.2 s). With these exact window lengths the spectral leakage has no influence on those spectral components that are a multiple number of the spectral resolution fw = 5 Hz. To achieve this goal it is necessary to use a sampling rate locked to the fundamental frequency by means of a Phase Locked Loop system (PLL). Finally, to measure the spectral components up to 9 kHz it is needed the use of a sampling rate over 18 kHz.

2.5.1.1 Calculation of the subgrouped harmonic, inter harmonic and higher frequency current components.

The DFT applied to each window provides the spectral components, ck, with a resolution of 5 Hz from the DC component up to fs 2 . Fig. 1 shows how the subgrouped harmonic and interharmonic components are grouped. The values of the components can be obtained by Power Quality in Grid-Connected Wind Turbines 549 www.intechopen.com grouping the different spectral components from the DFT, according to the next equations:

$$I_{sg,h}^2 = \sum_{i=-1}^{1} c_{k+i}^2$$

$$I_{isg,h}^2 = \sum_{i=2}^{p} c_{k+i}^2$$

2.5.1.2 Smoothing process.

For each 0.2 s window the equations (2) and (3) provide Isg,h, Iisg,h and Ib (this makes a total of 3000 values of each for every single value of h or b, in case of 10 min time-series). To avoid abrupt transitions between different windows, the subgrouped current components obtained for each value of h and b are smoothed by processing those 3000 values through a 1st low-pass filter with a time constant of 1.5 s. This filter must be designed for a sampling frequency of 5 Ss because the Isg,h, Iisg,h and Ib values are available every 0.2 s. Moreover, it is necessary to eliminate the first 50 values corresponding to the filter transient in order to obtain an accurateaverage of the 3000 values at the filter output.

PROPOSED SYSTEM

3. Block Diagram:

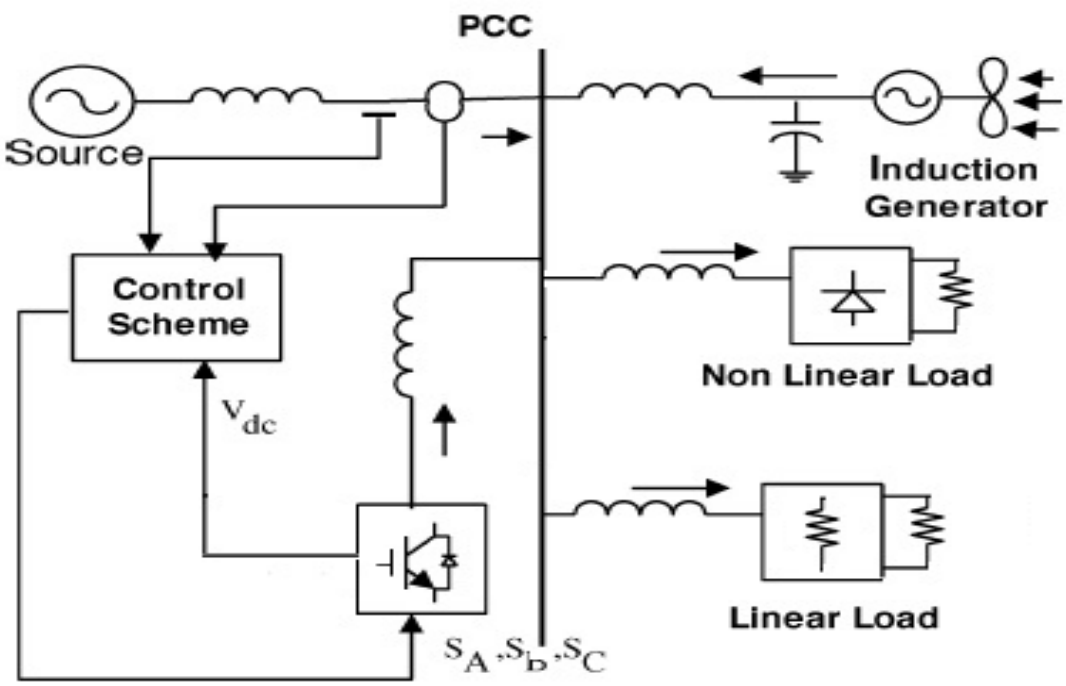

3.1 Description about Block Diagram

Principle of STATCOM

A STATCOM is in principle a voltage source converter (VSC) connected via an inductance to a grid. The concept has been known for many years and is described in detail. Figure 1 shows an example of a STATCOM connected to a grid; Figure 2 shows the simplified single line diagram. The inductance can represent a reactor or a transformer. Reactive power can be altered by modifying the voltage amplitude of the VSC. The phasor diagram in Figure 3 helps to understand the principle of the STATCOM. For this purpose, a transformer with a turns-ratio of 1:1 or a reactor is assumed. In addition, constant grid voltage is assumed. Therefore, the grid voltage vector UGrid remains at a constant value. If the value of the compensator voltage vector UComp is higher than the grid voltage vector, the vector of the voltage drop across the inductance XT is in the same direction as the compensator voltage vector. Therefore the compensator current I_{Grid} flows in positive direction . In this situation, the STATCOM acts like a capacitor. If the value of the compensator voltage vector UComp is lower than the grid voltage vector, the vector of the voltage drop across the inductance XT is in the opposite direction compared to the compensator voltage vector. Therefore the compensator current I_{Grid} flows in negative direction . In this situation, the STATCOM acts like an inductor.

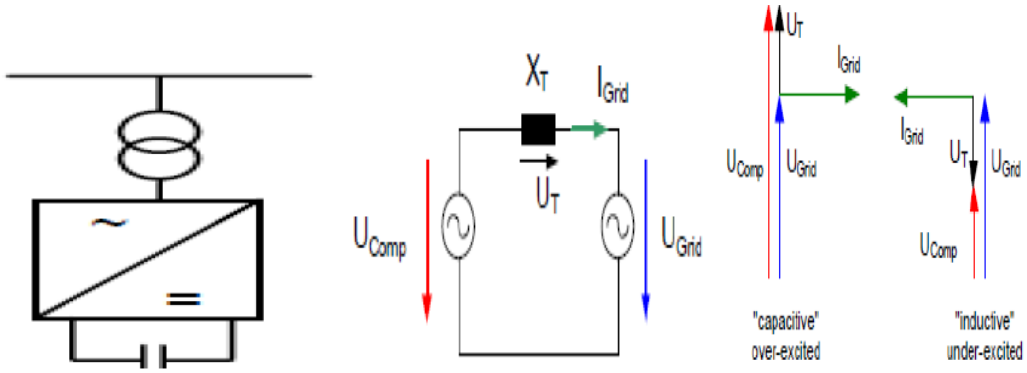

Controller for STATCOM

The control scheme approach is based on injecting/absorbing the currents into/from the grid using bang-bang controller. The controller uses a hysteresis current controlled technique. Using such technique, the controller keeps the control system variable between boundaries of hysteresis area and gives correct switching signals for STATCOM operation. The control system scheme for generating the switching signals to the STATCOM is shown in Fig. 7.2.The control

algorithm needs the measurements of several variables such as three-phase source current, DC voltage, inverter current with the help of sensor. The current control block, receives an input of reference current and actual current are subtracted so as to activate the operation of STATCOM in current control mode. In three-phase balance system, the RMS voltage source amplitude is calculated at the sampling frequency from the source phase voltage (Vsa, Vsb, Vsc) and is expressed, as sample template, sampled peak voltage(1)

$$V_{sm} = \{\tfrac{2}{3}(V_{sa}^2 + V_{sb}^2 + V_{sc}^2)\}^{1/2} \qquad (1)$$

The in-phase unit vectors are obtained from AC source—phase voltage and the RMS value of unit vector (Usa, Usb, Usc) as shown in bellow(2)

$$U_{sa} = \frac{V_{sa}}{V_{sm}}, U_{sb} = \frac{V_{sb}}{V_{sm}}, U_{sc} = \frac{V_{sc}}{V_{sm}} \qquad (2)$$

The in-phase generated reference currents are derived using in-phase unit voltage template as bellow (3)

$$i_{sa}^* = I.U_{sa}, i_{sb}^* = I.U_{sb}, i_{sc}^* = I.U_{sc} \qquad (3)$$

Where, I is proportional to magnitude of filtered source voltage for respective phases. This ensures that the source current is controlled to be sinusoidal.

Bang-Bang Current Controller is implemented in the current control scheme. The reference current is generated as in (2) and actual current are detected by current sensors and are subtracted for obtaining a current error for a hysteresis based bang-bang controller. Thus the ON/OFF switching signals for IGBT of STATCOM are derived from hysteresis controller[12]. The switching function SA for phase _a' is expressed as bellow

$$i_{sa} < (i_{sa}^* - HB) \rightarrow S_A = 0$$

$$i_{sa} > (i_{sa}^* - HB) \rightarrow S_A = 1$$

Where HB is a hysteresis current-band, similarly the switching function SB,SC can be derived for phases b and c.

3.2Modeling of Control Circuit

The control scheme approach is based on injecting/absorbing the currents into/from the grid using bang-bang controller. The controller uses a hysteresis current controlled technique. Using such technique, the controller keeps the control system variable between boundaries of

hysteresis area and gives correct switching signals for STATCOM operation. The control system scheme for generating the switching signals to the STATCOM is shown in Fig. 7.2.The control algorithm needs the measurements of several variables such as three-phase source current, DC voltage, inverter current with the help of sensor. The current control block, receives an input of reference current and actual current are subtracted so as to activate the operation of STATCOM in current control mode Once the reference supply currents are generated, a carrier less hysteresis PWM controller is employed over the sensed supply currents and instantaneous reference currents to generate gating pulses to the IGBTs of STATCOM. The controller controls the STATCOM currents to maintain supply currents in a band around the desired reference current values. The hysteresis controller generates appropriate switching pulses for six IGBTs of the VSI working as STATCOM.

SIMULATION ARRANGEMENT

4. Simulation Circuit

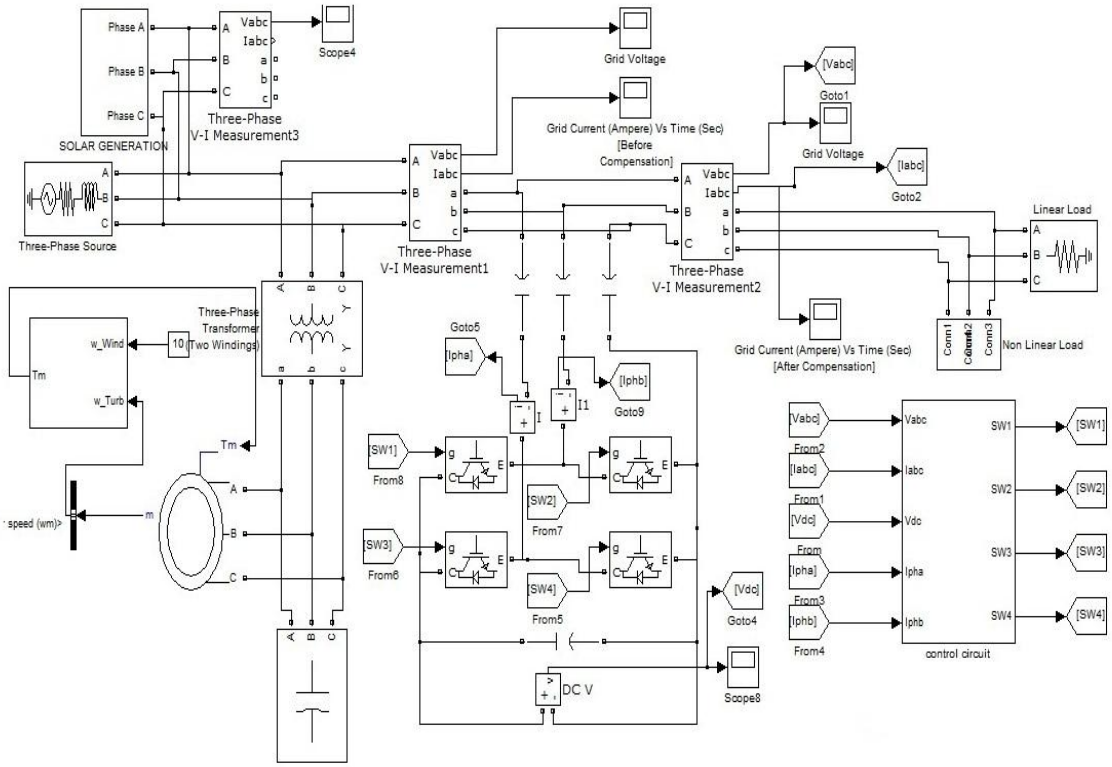

4.1Control Circuit

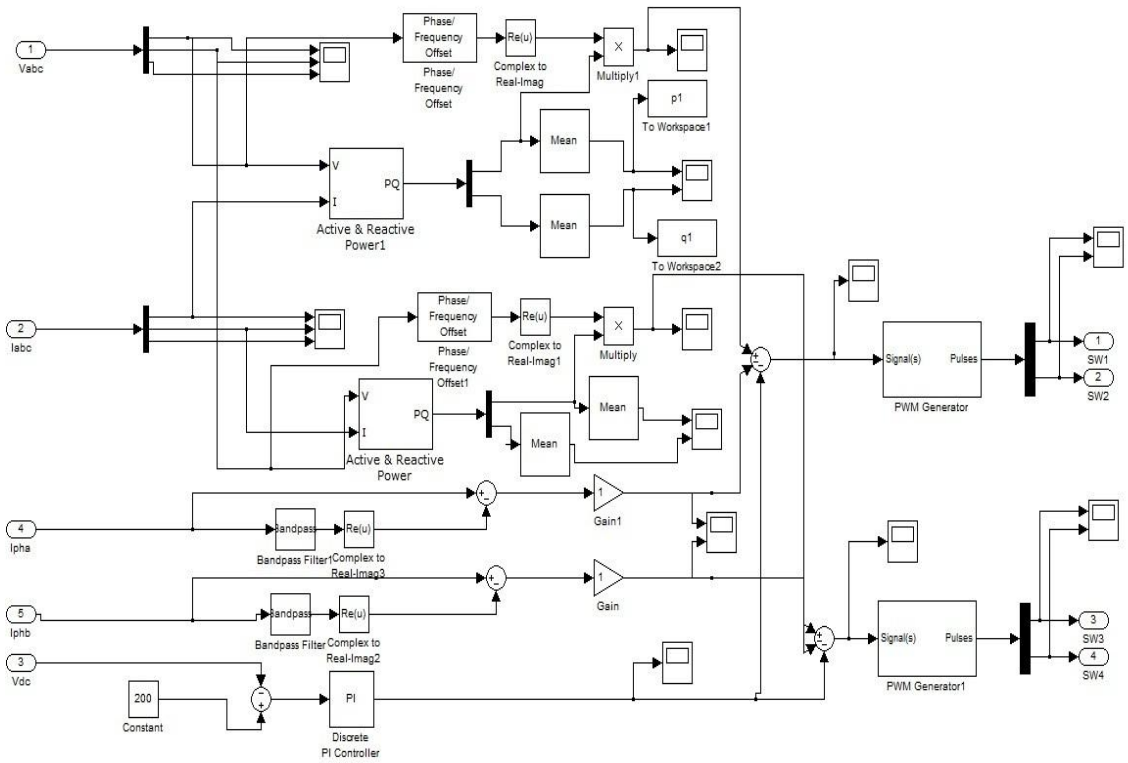

4.2 Solar Generation - Circuit

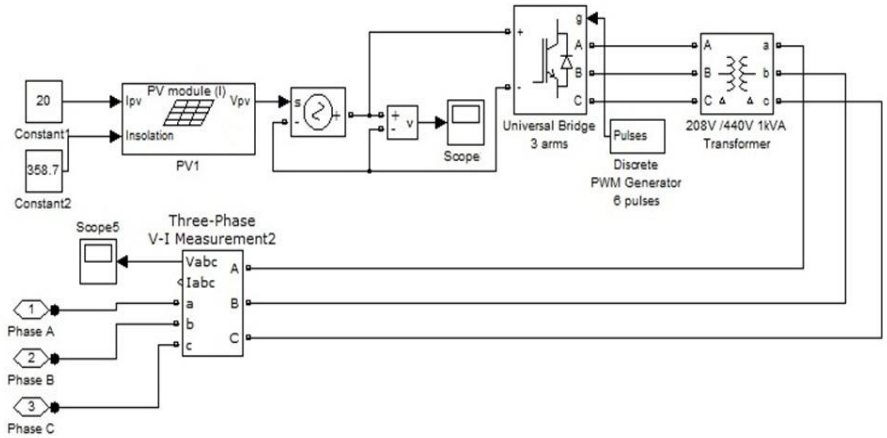

4.3 Simulation Results

Without Compensation

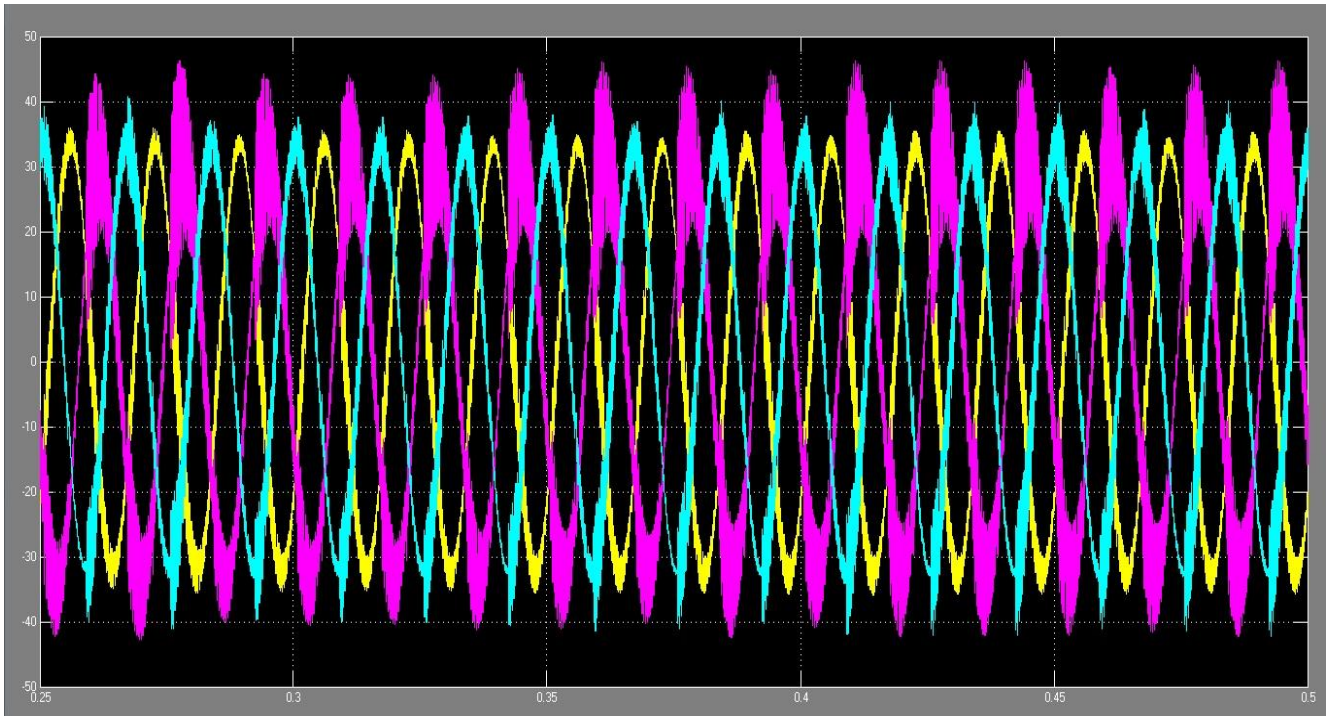

With Compensation

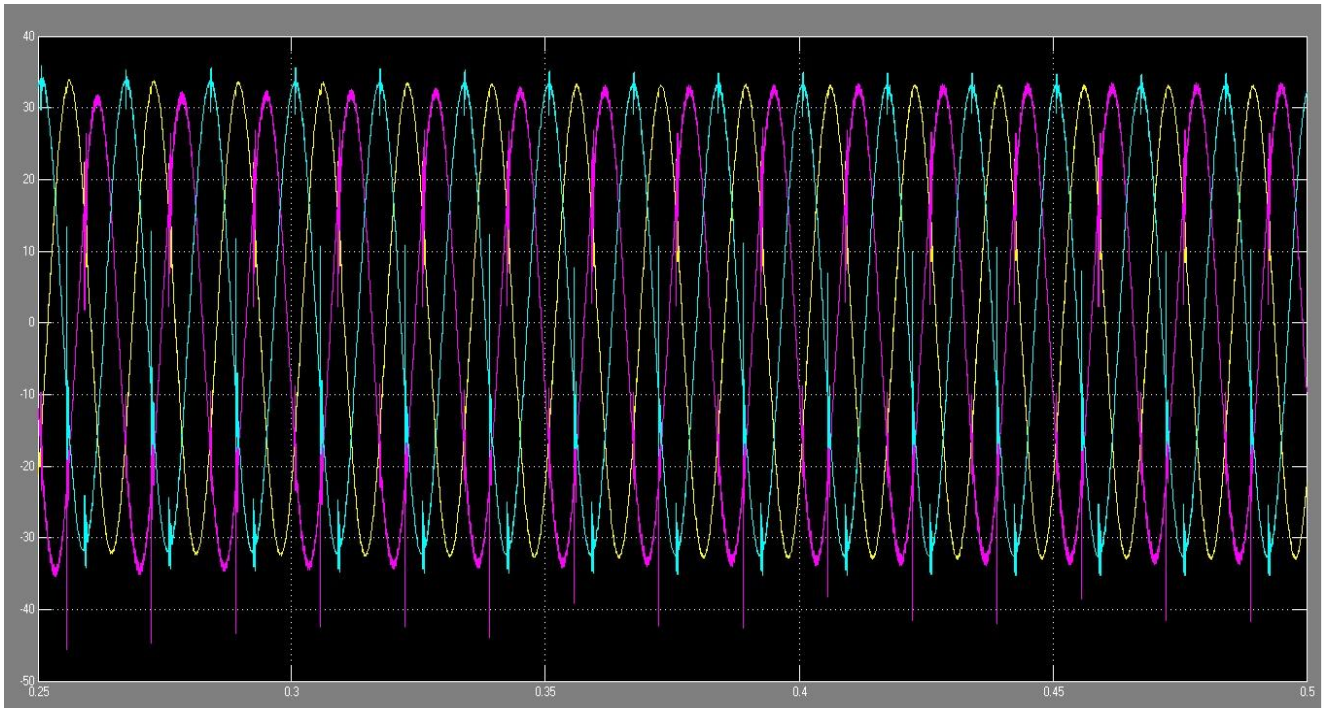

THD without Compensation

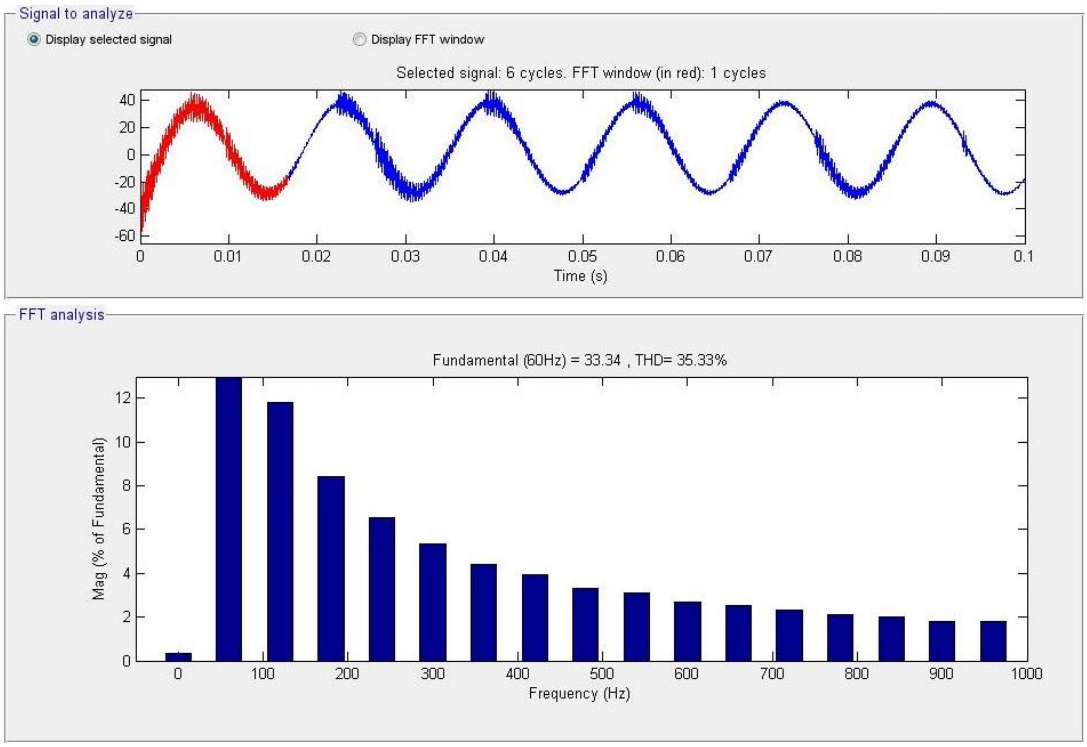

THD with Compensation

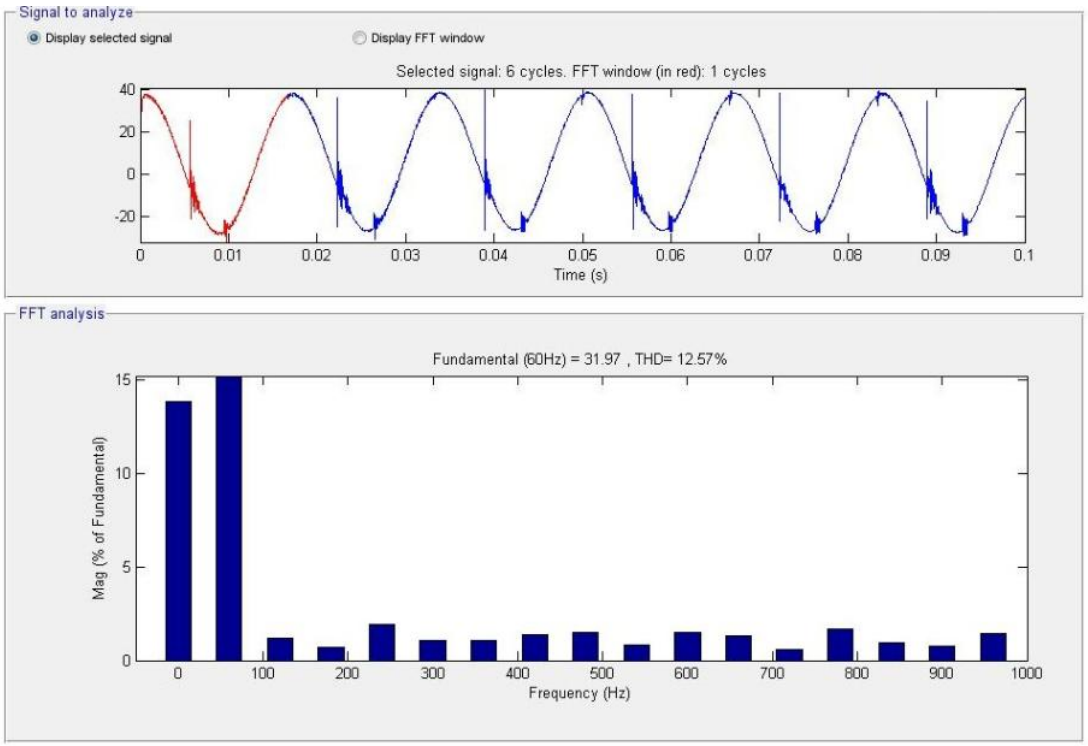

5.Conclusion

STATCOM system is an efficient mean for mitigation of PQ disturbances introduced to the grid. STATCOM compensator is a flexible device which can operate in current control mode for compensating voltage variation, unbalance and reactive power and in voltage control mode as a voltage stabilizer. The latter feature enables its application for compensation of dips coming from the supplying network. The simulation results show that the performance of STATCOM system has been found to be satisfactory for improving the power quality at the consumer premises. STATCOM control algorithm is flexible and it has been observed to be capable of correcting power factor to unity, eliminate harmonics in supply currents and provide load balancing. It is also able to regulate voltage at PCC. The control algorithm of STATCOM has an inherent property to provide a self-supporting DC bus of STATCOM. It has been found that the STATCOM system reduces THD in the supply currents for non-linear loads. Rectifier-based non-linear loads generated harmonics are eliminated by STATCOM. When single-phase rectifier loads are connected, STATCOM currents balance these unbalanced load currents.

5.1. Scope for future expansion

The STATCOM based circuit for harmonic reduction in grid connected wind energy system can be modelled with advanced switching devices and the control scheme used in this project can be followed to find a new method of control arrangement to have improved switching characteristics and the better overall performance.

References

1] A. Sannino, “Global power systems for sustainable development,” in *IEEE General Meeting*, Denver, CO, Jun. 2004.

[2] K. S. Hook, Y. Liu, and S. Atcitty, “Mitigation of the wind generation integration related power quality issues by energy storage,” *EPQU J.*, vol. XII, no. 2, 2006.

[3] R. Billinton and Y. Gao, “Energy conversion system models for adequacy assessment of generating systems incorporating wind energy,” *IEEE Trans. on E. Conv.*, vol. 23, no. 1, pp. 163–169, 2008, Multistate.

[4] *Wind Turbine Generating System—Part 21*, International standard-IEC 61400-21, 2001.

[5] J. Manel, “Power electronic system for grid integration of renewable energy source: A survey,” *IEEE Trans. Ind. Electron.*, vol. 53, no. 4, pp. 1002–1014, 2006, Carrasco.

[6] M. Tsili and S. Papathanassiou, "A review of grid code technology requirements for wind turbine," *Proc. IET Renew.power gen.*, vol. 3, pp. 308–332, 2009.

[7] S. Heier, *Grid Integration of Wind Energy Conversions*. Hoboken, NJ: Wiley, 2007, pp. 256–259.

[8] J. J. Gutierrez, J. Ruiz, L. Leturiondo, and A. Lazkano, "Flicker measurement system for wind turbine certification," *IEEE Trans. Instrum. Meas.*, vol. 58, no. 2, pp. 375–382, Feb. 2009.

[9] Indian Wind Grid Code Draft report on, Jul. 2009, pp. 15–18, C-NET.

[10] C. Han, A. Q. Huang, M. Baran, S. Bhattacharya, and W. Litzenberger, "STATCOM impact study on the integration of a large wind farm into a weak loop power system," *IEEE Trans. Energy Conv.*, vol. 23, no. 1, pp. 226–232, Mar. 2008.

[11] D. L. Yao, S. S. Choi, K. J. Tseng, and T. T. Lie, "A statistical approach to the design of a dispatchable wind power—Battery energy storage system," *IEEE Trans. Energy Conv.*, vol. 24, no. 4, Dec. 2009.

[12] F. Zhou, G. Joos, and C. Abhey, "Voltage stability in weak connection wind farm," in *IEEE PES Gen. Meeting*, 2005, vol. 2, pp. 1483–1488.

[13] T. Kinjo and T. Senjyu, "Output leveling of renewable energy by electric double layer capacitor applied for energy storage system," *IEEE Trans. Energy Conv.*, vol. 21, no. 1, Mar. 2006.

[14] R. S. Bhatia, S. P. Jain, D. K. Jain, and B. Singh, "Battery energy storage system for power conditioning of renewable energy sources," in *Proc. Int. Conf. Power Electron Drives System*, Jan. 2006, vol. 1, pp. 501–506.

[15] S. W. Mohod and M. V. Aware, "Grid power quality with variable speed wind energy conversion," in *Proc. IEEE Int. Conf. Power Electronic Drives and Energy System (PEDES)*, Delhi, Dec. 2006.

[16] Fu. S. Pai and S.-I. Hung, "Design and operation of power converter for microturbine powered distributed generator with capacity expansion capability," *IEEE Trans. Energy Conv.*, vol. 3, no. 1, pp. 110–116, Mar. 2008.

[17] J. Zeng, C. Yu, Q. Qi, and Z. Yan, "A novel hysteresis current control for active power filter with constant frequency," *Elect. Power Syst. Res.*, vol. 68, pp. 75–82, 2004.

[18] M. I. Milands, E. R. Cadavai, and F. B. Gonzalez, "Comparison of control strategies for shunt active power filters in three phase four wire system," *IEEE Trans. Power Electron.*, vol. 22, no. 1, pp. 229–236, Jan.2007.

[19] S. W. Mohod and M. V. Aware, "Power quality issues & it's mitigation technique in wind energy conversion," in *Proc. of IEEE Int. Conf. Quality Power & Harmonic*, Wollongong, Australia, 2008.

MAXIMUM POWER POINT TRACKING ON RESONANT HIGH BOOST RATIO TRANSFORMER BASED DC-DC CONVERTER

Mr.Sudin.S.K[#1], Mr.Sujith S[*2]

[#]PG Student, Department of Electrical and Electronics Engineering, NSS College of Engineering,

Palakkad, Kerala, India

[1]sudinorange@gmail.com

**Asst Prof. Department of Electrical and Electronics Engineering, N.S.S College of Engineering*

Palakkad, Kerala

[2]sujiths99@yahoo.co.uk

Abstract:

A non-isolated, high boost ratio hybrid transformer dc–dc converter with applications for low-voltage renewable energy sources like solar energy is proposed. The proposed converter utilizes a hybrid transformer to transfer the inductive and capacitive energy simultaneously, achieving a high boost ratio with a smaller sized magnetic component. As a result of incorporating the resonant operation mode into the traditional high boost ratio pulse width modulation converter, the turn-off loss of the switch is reduced, increasing the efficiency of the converter under all load conditions. The input current ripple and conduction losses are also reduced because of the hybrid linear-sinusoidal input current waveforms. The voltage stresses on the active switch and diodes are maintained at a low level and are independent of the changing input voltage over a wide range as a result of the resonant capacitor transferring energy to the output of the

converter. The main aim of the paper is to implement a suitable MPPT algorithm considering the input and load variation.

1. Introduction

The energy consumption around the globe is increasing at an alarming rate, due to the rising costs and limited amount of nonrenewable energy sources, there is an increasing demand for the utilization of renewable energy sources such as photovoltaic (PV) modules. Integrating the power from the PV module into the existing power distribution infrastructure can be achieved through power conditioning systems (PCS). The double-stage PCS consists of a dc–dc conversion stage that is connected to either a low power individual inverter or a high-power centralized inverter that multiple converters could connect to. The dc–dc conversion stage of the PCS requires a high efficiency, high boost ratio dc–dc converter to increase the low dc input voltage from the PV panel to a higher dc voltage. This voltage has to be higher than the peak output voltage of the dc–ac inverter, nominally in the 380–400V range. The double-stage design can also suppress ac line double frequency by utilizing the active ripple cancellation technique. The high boost ratio dc–dc converter for such systems can be isolated or non-isolated; however, transformer-isolated converters tend to be less efficient and more expensive due to the increased manufacturing costs. A non-isolated dc–dc converter with a high boost ratio would be advantageous for a two-stage PCS because it can be easily integrated with current PV systems while reducing the cost and maintaining a high system efficiency.

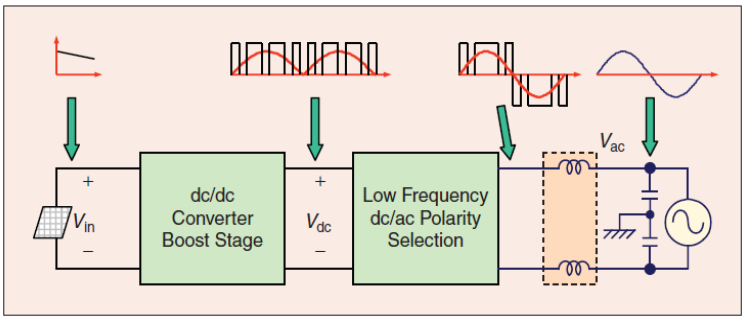

Fig no.1.1: A PCS architecture with a dc–dc converter (dc-dc converter used here is isolated)

Due to the different output voltages from the PV panel, it would be beneficial to have a system with a high efficiency over the entire PV voltage range to maximize the use of the PV during different operating conditions. Another important function of the dc–dc converter for PV applications is being able to implement maximum power point tracking (MPPT). The ability to implement MPPT for an individual PV panel would ensure that a large cluster of PV could maintain maximum power output from each panel without interfering with the other panels in the system. The major consideration for the main power stage of the converter in being able to implement an accurate MPPT is that the input current ripple of the converter has to be low.

2. Theory

A high boost ratio dc–dc converter with hybrid transformer is presented to achieve high system level efficiency over wide input voltage and output power ranges. By adding a small resonant inductor and reducing the capacitance of the switched-capacitor in the energy transfer path, a hybrid operation mode which combines pulse width modulation (PWM) and resonant power conversions, is introduced in the proposed high boost ratio dc–dc converter. The inductive and capacitive energy can be transferred simultaneously to the high voltage dc bus increasing the total power delivered decreasing the losses in the circuit. As a result of the energy transferred through the hybrid transformer that combines the modes where the transformer operates under normal conditions and where it operates as a coupled-inductor, the magnetic core can be used more effectively and smaller magnetics can be used. The continuous input current of the converter causes a smaller current ripple than that of previous high boost ratio converter topologies that used coupled-inductors. The lower input current ripple is useful in that the input capacitance can be reduced and it is easier to implement a more accurate MPPT for PV modules. The conduction losses in the transformer are greatly reduced because of the reduced input current RMS value through the primary side. The voltage stress of the active switch is always at a low voltage level and independent of the input voltages. Due to the introduction of the resonant portion of the current, the turn-off current of the active switch is reduced. As a result of the decreased RMS current value and smaller turn-off current of the active switch, high efficiency can be maintained at light output power level and low-input voltage operation. Because of the resonant capacitor transferring

energy to the output of the converter, all the voltage stresses of the diodes are kept under the output dc bus voltage and independent of the input voltage.

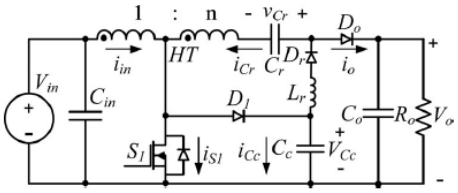

Fig 2.1 Proposed high step-up dc–dc converter with hybrid transformer.

*C*in is the input capacitor; *HT* is the hybrid transformer with the turns ratio 1:*n*; *S*1 is the active MOSFET switch; *D*1 is the clamping diode, which provides a current path for the leakage inductance of the hybrid transformer when *S*1 is OFF, *Cc* captures the leakage energy from the hybrid transformer and transfers it to the resonant capacitor *Cr* by means of a resonant circuit composed of *Cc* , *Cr* , *Lr* , and *Dr* ; *Lr* is a resonant inductor, which operates in the resonant mode; and *Dr* is a diode used to provide an unidirectional current flow path for the operation of the resonant portion of the circuit. *Cr* is a resonant capacitor, which operates in the hybrid mode by having a resonant charge and linear discharge. The turn-on of *Dr* is determined by the state of the active switch *S*1 . *Do* is the output diode similar to the traditional coupled-inductor boost converter and *Co* is the output capacitor. *Ro* is the equivalent resistive load.

MPPT:- Maximum Power Point Tracking, frequently referred to as MPPT, is an electronic system that operates the Photovoltaic (PV) modules in a manner that allows the modules to produce all the power they are capable of. MPPT is not a mechanical tracking system that "physically moves" the modules to make them point more directly at the sun.MPPT is a fully electronic system that varies the electrical operating point of the modules so that the modules are able to deliver maximum available power. MPPT can be used in conjunction with a mechanical tracking system, but the two systems are completely different.

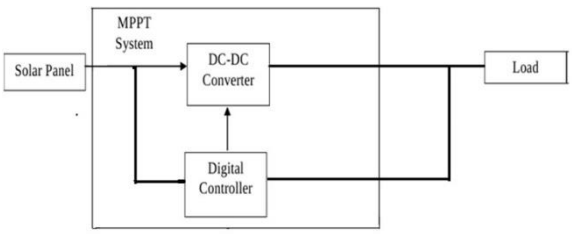

Fig 2.2 General layout of the system

2.1 MPPT TECHNIQUE

The disadvantage of the perturb and observe method to track the peak power under fast varying atmospheric condition is overcome by incremental conductance method. The IC can determine that the MPPT has reached the MPP and stop perturbing the operating point. If this condition is not met, the direction in which the MPPT operating point must be perturbed can be calculated using the relationship between dl/dV and –I/V .This relationship is derived from the fact that dP/dV is negative when the MPPT is to the right of the MPP and positive when it is to the left of the MPP. This algorithm has advantages over P&O in that it can determine when the MPPT has reached the MPP, where P&O oscillates around the MPP. Also, incremental conductance can track rapidly increasing and decreasing irradiance conditions with higher accuracy than P and O.

The basic equations of this method are as follows:

INCRIMENTAL CONDUCTANCE MPPT ALGORITHM

This method uses the fact that slope at the maximum point is zero. We have,

$P = V I$

Applying the chain rule for the derivative of products yields to

$\partial P/\partial V = [\partial(VI)]/ \partial V$

At MPP, as $\partial P/\partial V=0$

The above equation could be written in terms of array voltage V and array current I as

$\partial I/\partial V = - I/V$

The MPPT regulates the PWM control signal of the dc – to – dc boost converter until the condition: $(\partial I/\partial V) + (I/V) = 0$

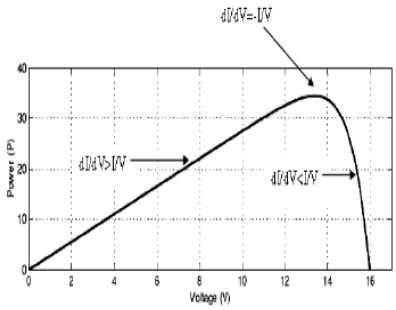

Fig 2.3 Power vs voltage curve

is satisfied. In this method the peak power of the module lies at above 98% of its incremental conductance. The Flow chart of incremental conductance MPPT is shown below

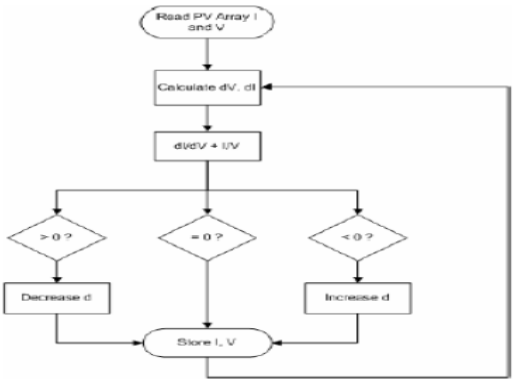

Fig 2.4 IC algorithm

The incremental conductance algorithm keeps the system at its maximum power point, thus providing a constant output under wide range of varying condition.This algorithm can be implemented with help of high speed controller like DSP,dSPIC etc.This system along with dc-dc converter makes it possible for low power source like a photovoltaic module to be connected to a grid.

The following are the features and benefits of proposed converter:

1) This converter transfers the capacitive and inductive energy simultaneously to increase the total power delivery reducing losses in the system.

2) The conduction loss in the transformer and MOSFET is reduced as a result of the low- input RMS current and switching loss is reduced with a lower turn-off current. With these improved performances, the converter can maintain high efficiency under low output power and low-input voltage conditions.

3) With low-input ripple current feature, the converter is suitable for PV module, where accurate MPPT is performed by the dc–dc converter.

4) The incremental conductance algorithm keeps the output constant under different irradiation condition.

3. CONCLUSION

A high boost ratio dc–dc converter with hybrid transformer suitable for alternative dc energy sources with low dc voltage input is proposed. The resonant conversion mode is incorporated into a traditional high step-up PWM converter with coupled-inductor and switched-capacitor obtaining very high efficiency. The voltage stress on switch is greatly reduced. Thus the proposed converter is suitable for low power energy source like solar energy. The characteristics of proposed converter are suitable for implementing an accurate MPPT. Incremental conductance is the most suitable MPPT algorithm for the proposed converter.

Reference:

[1] J.-S. Lai, “Power conditioning circuit topologies,” IEEE Ind. Electron.Mag.,vol. 3, no. 2, pp.24–34, Jun. 2009.

[2] Q. Zhao and F. C. Lee, “High-efficiency, high step-up dc–dc converters,” IEEE Trans. Power Electron., vol. 18, no. 1, pp. 65–73, Jan. 2003.

[3] R. J.Wai and R. Y. Duan, “High step-up converter with coupled-inductor,” IEEE Trans. Power Electron., vol. 20, no. 5, pp. 1025–1035, Sep. 2005.

[4] R. J. Wai, C. Y. Lin, R. Y. Duan, and Y. R. Chang, “High-efficiency DC–DC converter with high voltage gain and reduced switch stress,” IEEE Trans. Ind. Electron., vol. 54, no. 1, pp. 354–364, Feb. 2007.

[5] S. Dwari and L. Parsa, “An efficient high-step-up interleaved DC–DC converter with a common active clamp,” IEEE Trans. Power Electron., vol. 26, no. 1, pp. 66–78, Jan. 2011.

[6] K. B. Park, G. W. Moon, and M. J. Youn, “Nonisolated high step-up stacked converter based on boost-integrated isolated converter,” IEEE Trans. Power Electron., vol. 26, no. 2, pp. 577–587, Feb. 2011.

[7] Y. P. Hsieh, J.-F. Chen, T. J. Liang, and L. S. Yang, “A novel high step-up DC–DC converter for a microgrid system,” IEEE Trans. Power Electron., vol. 26, no. 4, pp. 1127–1136, Apr. 2011.

[8] Y. P. Hsieh, J.-F. Chen, T. J. Liang, and L. S. Yang, “Novel high step-up DC–DC converter with coupled-inductor and switched-capacitor techniques for a sustainable energy system,” IEEE Trans. Power Electron., vol. 26, no. 12, pp. 3481–3490, Dec. 2011.

[9] Y. P. Hsieh, J.-F. Chen, T. J. Liang, and L. S. Yang, “Novel high step-up DC–DC converter with coupled-inductor and switched-capacitor techniques,” IEEE Trans. Power Electron., vol. 59, no. 2, pp. 998–1007, Feb. 2012.

[10] S. M. Chen, T. J. Liang, L. S. Yang, and J. F. Chen, “A cascaded high step-up dc–dc converter with single switch for microsource application,” IEEE Trans. Ind. Electron., vol. 26, no. 4, pp. 1146–1153, Apr. 2011.

Robust Position and Sway Control of Under-actuated Onshore Container Crane System

Smitha G[#1], Abraham T Mathew[*2]

[#]*Department of Electrical Engineering, National Institute of Technology Calicut (NITC)*
Kozhikode, Kerala, India
[1]smithaghere@gmail.com

[*]*Professor, Department of Electrical Engineering, National Institute of Technology Calicut (NITC)*
Kozhikode, Kerala, India

[2]atm@nitc.ac.in

Abstract

The onshore container cranes are used in the container transshipment terminals of seaports to load and unload containers to and from container ships. This container crane system is a typical nonlinear under-actuated system with strong states' coupling, the trolley translation causing the payload (container) to swing back and forth, which not only reduces the efficiency of the overall system but also leads to potential risks of hitting surrounding operators. To improve the transportation efficiency and enhance the safety of the crane system, the trolley is required to reach the desired position fast enough, while the swing of the payload needs to be within an acceptable domain. The objective of the paper is to effectively model the nonlinear container crane system, including the friction and wind disturbance, and to design a Sliding Mode Control (SMC) algorithm based on the non-linear container crane model. The two dimensional 2 Degree of Freedom (DOF) model of the container crane system is obtained using Lagrange's equation; friction nonlinearity (Lu-Gre friction model) and wind disturbance are then added to it. The main control objectives in the container crane operation are to track the trolley so as to reach the destination as fast as possible to improve the transportation efficiency; keep the payload swing as small as possible during the transportation process to ensure the safety of the system and the personnel; and to absolutely suppress the container vibrations at the destination so as to enable accurate positioning of the container. To demonstrate the efficiency of the proposed algorithm, simulation results are provided.

Key words: ***Container Transportation; Container Crane; Degree of freedom (DOF); Under-actuated systems; Lagrange's equation; Lu-Gre friction model; Wind load; Sliding Mode Control (SMC).***

1. Introduction

An onshore container crane is a type of large dockside gantry crane, found at the container terminals of seaport, for loading and unloading containers between container ships and trucks. It has three main parts –a supporting structure called gantry, a trolley that runs on rails and a moving gripper called spreader that locks on to the container by a twist-lock mechanism. The performance of the container crane is mainly measured by the following parameters - high hoist and trolley speeds resulting in short cycle time, high reliability/availability figures with MTBF (Mean Time between Failures) values of less than 0.5%. Most crane systems in practice are manually operated by experienced workers. Manual operation results in such disadvantages as low efficiency, long time delays, low safety, long duration training for operators, high operating cost etc [1]. The researchers have identified the need for an automatic control to manage the drawbacks of manual operation and to improve the efficiency and productivity of the container terminals. It should be pointed out that, when transferring payloads, a container crane is unavoidably affected by various kinds of disturbance, such as the friction between the trolley and the rail, wind etc [2]. In an automated control environment, the disturbances can cause unpredictable output. So detailed investigation need to be done to study the effect of the uncertainties on the overall performance of the container crane system and also to suggest suitable robust control methods. Since sliding mode control (SMC) is largely proposed for nonlinear control with uncertainties, it has been decided to focus on SMC in the control of the container crane system.

2. Objective & Problem Definition

The objective of the project is to effectively model the nonlinear container crane system and to design an SMC algorithm based on the container crane model. The two dimensional 2 DOF model is developed using Lagrange's equation. Lu-Gre friction model and wind disturbance is also included in the model of the container crane. The main control objectives in the container crane operation are track the trolley so as to reach the destination as fast as possible to improve the transportation efficiency; keep the payload swing as small as possible during the transportation process to ensure the safety of the system and the personnel; and to absolutely suppress the container vibrations at the destination so as to enable accurate positioning of the container.

3. System Description & Modeling

The container crane consists of a supporting framework that can traverse the length of a quay or yard, and a moving platform called a "spreader". The spreader can be lowered down on top of a container and locks onto the container's four locking points ("cornercastings"), using a twist-lock mechanism. The trolley runs along rails that are located on top or sides of the boom and girder.

Fig 1 : Container Cranes at International Container Transhipment Terminal (ICTT), Vallarpadam, Kochi, Kerala, India [1]

Once the spreader locks onto the container, the container is lifted and moved over the dock and placed on a truck chassis (trailer) to then be taken to the storage yard. The crane will also lift containers from chassis on the dock to load them onto the ship. A container crane may rely on several operating systems to provide the power and strength needed to lift the containers. Some utilize a hydraulic lifting mechanism, while others use an electric or hybrid engine. A crane can be powered by two types of power supply; by a diesel-engine driven generator located on top of the crane or by electric power from the dock. The most common is by electric power from the dock (also known as shore power). The voltage required may range from 4,000 up to 13,200 volts AC. Since we need the mathematical model for designing the controller, we approach the dynamic modeling of the container crane first.

3.1 Two DOF Model

Consider the container crane model illustrated in Fig.2. The container (payload) is picked up by the spreader, both being suspended from the trolley by a rope of length l [2]. Let

x - Trolley position along the X –axis from the reference (m)

θ - Angular swing of the payload (rad)

g - Gravitational acceleration (m/s^2)

m_t -mass of the trolley (kg)

m_p - mass of the payload (kg)

f_x - control force applied to the trolley (N)

l - length of the rope (m)

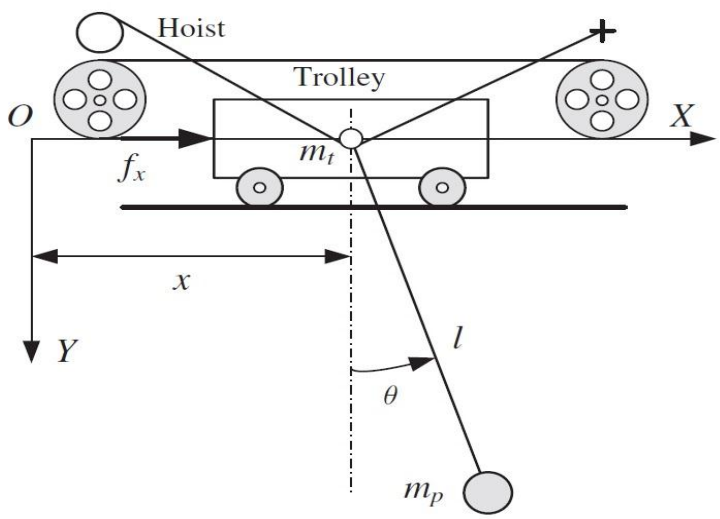

Fig. 2. Trolley-Pendulum Model of Container Crane [2].

The following are the modeling assumptions. In an actual crane, four ropes are used to hoist the spreader (including the payload). However, for simplicity, only one rope is assumed here. It is also assumed that the motions of both the spreader and the rope occur in the vertical plane, that is, the $X-Y$ -plane. Payload is considered as point, i.e. the container is replaced with a concentrated mass m_p. Rope is assumed to be mass-less, rigid and inflexible. Rope length is assumed to be constant (applicable only for transportation stage, not for payload hoisting/lowering stage). During the overall transferring process, payload is beneath the trolley. $\theta \in (-\frac{\pi}{2}, \frac{\pi}{2})$. All frictional elements in trolley are ignored. Air resistance is ignored. External disturbances like wind are neglected.

Considering the motions of the trolley and the payload in the two-dimensional (2D) plane, the co-ordinates of the payload (x_p , y_p) is given by

$$x_p = x + l\sin\theta, \quad y_p = -\, l\cos\theta \tag{1}$$

The kinetic energy T of the entire system is given by

$$T = \frac{1}{2} m_t \dot{x}^2 + \frac{1}{2} m_p v_p^2 \tag{2}$$

where v_p is the velocity of the payload, $v_p^2 = \dot{x}_p^2 + \dot{y}_p^2$ (3)

Substituting (3) in (2), we have

$$T = \frac{1}{2}(m_t + m_p)\dot{x}^2 + \frac{1}{2} m_p l^2 \dot{\theta}^2 + m_p \dot{x}\dot{\theta}\, l \cos\theta \tag{4}$$

The potential energy U of the entire system is given by

$$U = m_p g l (1 - \cos\theta) \tag{5}$$

Taking $\boldsymbol{q} = (x, \theta)$ as the generalized coordinates corresponding to the generalized forces $\boldsymbol{f} = (f_x, 0)$, and using Lagrange's equation

$$\frac{d}{dt}\left(\frac{\partial T}{\partial \dot{q}_i}\right) - \frac{\partial T}{\partial q_i} + \frac{\partial U}{\partial q_i} = f_i,\ i=1,2 \tag{6}$$

The equations of motion can be obtained as

$$(m_t + m_p)\ddot{x} + m_p l \ddot{\theta} \cos\theta - m_p l \dot{\theta}^2 \sin\theta = f_x$$

$$\ddot{x}\cos\theta + l\ddot{\theta} + g\sin\theta = 0 \tag{7}$$

The container crane system is under-actuated as it has only one input- f_x (control force applied to the trolley) and two outputs - trolley position x and payload swing angle θ. Its dynamics consists of two parts. The actuated dynamics, as described by the first differential equation of (7) corresponds to the actuated state, the trolley position x. The un-actuated dynamics, as given by the second differential equation of (7) corresponds to the un-actuated state, the payload swing angle θ. The un-actuated dynamics clearly shows the strong coupling between the states – trolley position x and payload swing angle θ, i.e. the trolley translation causing the payload (container) to swing. In the next section, the trolley friction is modeled based on Lu-Gre friction model. In the subsequent section, the impact of wind load on the payload of container crane is also assessed.

3.1.1. LU-GRE Friction Model

Lu-Gre friction model captures the complete frictional characteristics of a highly complex non linear container crane system such as limit-cycle behavior and stick-slip oscillations effectively. It was developed by Lund Institute of Technology, Sweden & University of Grenoble, France. A bristle interpretation of frictional interface is done in this model and the frictional force is measured in terms of Average bristle deflection, z [4]. Lu-Gre frictional force is given by $F = \sigma_0 z + \sigma_1 \dot{z} + \sigma_2 v$, $\dot{z} = v - \sigma_0 \frac{|v|}{|g(v)|} z$, $g(v) = \alpha_0 + \alpha_1 e^{-(\frac{v}{v_s})^2}$ (8)

where v is the relative velocity between the two surfaces, z is the average bristle deflection, σ_0 is the aggregate bristle stiffness, σ_1 is the damping coefficient, σ_2 is the viscous friction coefficient, α_0, α_1 are static friction coefficients, V_S is a very small slip velocity, below which the frictional interface can be thought of as being "stuck". The equations of motion, including friction, can now be obtained as

$$(m_t + m_p)\ddot{x} + m_p l\ddot{\theta}\cos\theta - m_p l\dot{\theta}^2 \sin\theta = f_x - F_t$$
$$\ddot{x}\cos\theta + l\ddot{\theta} + g\sin\theta = 0 \qquad (9)$$

where F_t, the frictional force in trolley movement is given by $F_t = \sigma_0 z + \sigma_1 \dot{z} + \sigma_2 \dot{x}$ (10)

3.1.2 Wind Load Assessment on the Payload of Container Crane

The container crane considered here is highly vulnerable to wind, as it is located on the seashore. The wind has two impacts on the container crane system – on its structure stability and on its payload. The structural stability of the container crane system is not in the scope of this paper. This section deals with the impact of wind on the payload of the container crane. The sway along the horizontal axis only is taken into consideration because it is the dominant component. The wind load [8] on the payload is given by

$$F_w = C_f A p_z \quad , p_z = 0.6 V_z^2 \quad , V_z = V_b K_1 K_2 K_3 \qquad (11)$$

where C_f is the force coefficient in the direction of the wind for the payload structure, A is the effective frontal area of the part under consideration, in square metres, i.e. the solid area projection on to a plane perpendicular to the wind direction, p_z is the wind pressure corresponding to appropriate design condition in kilonewtons per square metre, V_z is the design wind speed in m/s at any height z, V_b is the basic wind speed obtained from the wind speed map of the country, K_1 is the probability factor or risk co-efficient decided by the mean probable design life of structure in years and on the regional basic wind speed (its value is 1.0 for a design

life of 50 years), K_2 is the factor decided by the terrain, height and size of the structure (its value is 1.05 for a Category-1 (open area/treeless plains) terrain and Class A (structure dimension less than 20m) structure size), K_3 is the topography factor.

The wind load on the payload of container crane can be modeled as an input disturbance in the form of a ramp signal or as a sinusoidal or as a random sequence. In this paper, an input wind disturbance of sinusoidal and random form having the wind force F_w as its amplitude is applied to the 2 DOF model of the container crane, including Lu-Gre frictional force in trolley movement, given in equation (9). The next section will discuss about the sliding mode control (SMC) of the container crane system, as SMC is largely proposed for uncertain systems owing to it robustness.

4. Sliding Mode Control of Container Crane

Sliding Mode Control (SMC) is a robust control technique applicable for both uncertain linear and nonlinear systems. The controller performance is guaranteed irrespective of parameter variations and external disturbances. SMC is a Variable Structure System (VSS) control, where the control is allowed to change its structure, i.e. to switch at any instant from one to another member of a set of possible continuous functions of states, allowing the system to possess new properties not present in any of the structures used. SMC design consists of the following two stages:- 1. Selection of stable hyperplane(s) in state/error space on which the system dynamics should be restricted. This involves defining a stable sliding surface s = 0 in terms of states for regulation problems, and of error for tracking problems, where system stability is confined. 2. Designing a suitable control input that should steer the states/errors to the sliding surface within a finite time (Reaching mode), and make them stay on it (Sliding mode), in accordance with the the Lyapunov sliding condition, $s\dot{s} < 0$. In the reaching mode, the control dynamics depends on system parameters, but in the sliding mode, the control dynamics depends only on hyperplane parameters. This is the reason why SMC is immune to parameter variations and external disturbances. Also in the sliding mode, system order gets reduced by one, as the system dynamics is restricted to the selected hyperplane.

4.1 SMC - Hyperplane Design

Referring the system dynamics in equation (9), assuming θ (in radians) to be very small $\sin\theta \cong \theta$, $\cos\theta \cong 1$ and substituting the system parameters m_t = 1000 kg, m_p = 100 kg, g =

9.81m/s^2, l = 1m, the state space model of the system is given as follows:

$$\dot{x_1} = x_2, \dot{x_2} = 0.981\, x_3 - 0.001\, u, \dot{x_3} = x_4, \dot{x_4} = -10.791 x_3 + 0.001\, u \quad (12)$$

Hyperplane is defined as $s = G_1 * e_1 + G_2 * e_2 + G_3 * e_3 + G_4 * e_4 = 0$ (13)

where e (error) = state (x) - reference (r). The state space model given in equation (13) is rewritten in terms of error variables and G is designed by pole placement method, either by partition transformation or by Ackermann method. G is obtained as [-3.4598 -3.7482 9.2681 -2.3340] by partition transformation method.

4.2 SMC - Controller Design

Control input is made up of two parts - u_r and u_{eq}. The control input u_r makes the system reach the sliding surface, u_r is taken as -M*sign(s), where M is a high gain chosen. The control input u_{eq} makes the system stay on the sliding surface, u_{eq} is obtained by substituting $\dot{s} = 0$ (as it reaches the sliding surface, s = 0) and find the corresponding control input in terms of error dynamics. The control input is obtained as follows:

$$u = \frac{G_1 * e_2 + G_3 * e_4 + (G_2 * 0.981 - G_4 * 10.791) e_3}{(G_2 - G_4) * 0.001} - M * sign(s) \quad (14)$$

5. Results and Discussion

The open loop response of the 2 DOF model is simulated in this section. The controllability and observability of the system is then evaluated so as to implement a controller for improving the system performance. The closed loop response of the system is analysed using a PID controller. As PID controller cannot control the system effectively in the presence of an external disturbance and parameter variations, SMC, which is a robust one, is analysed next.

5.1 Openloop Response of 2 DOF Model

Fig. 3 shows the trolley position and swing angle behavior of 2 DOF model for a unit step trolley driving control force. The open loop 2 DOF system is not stable – trolley position is unbounded and the swing angle exhibits an oscillatory behavior. Friction has the effect of decreasing the magnitude of trolley position and angular swing output. With a sinusoidal pattern of wind disturbance, trolley position output remains unaffected whereas the magnitude of swing angle oscillation increases.

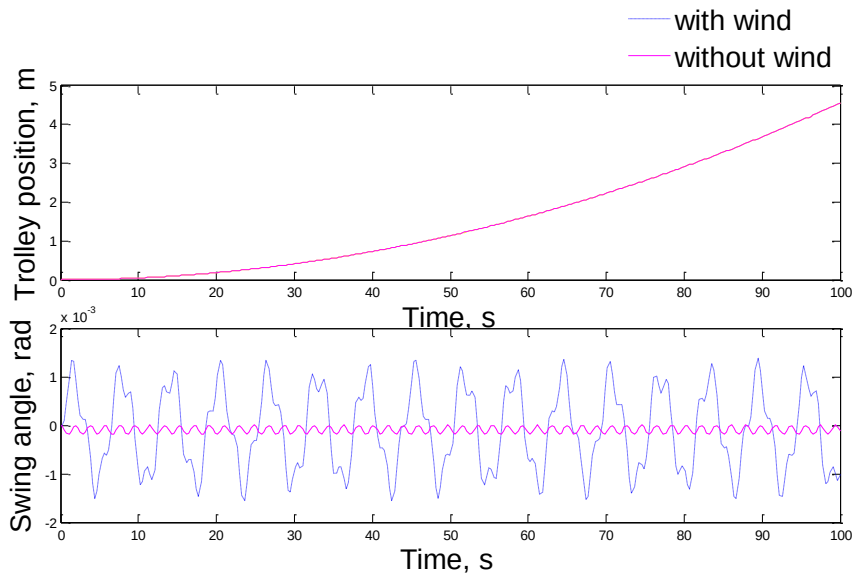

Fig. 3. Openloop Response of 2 DOF Model a. Trolley Position b. Swing Angle

Thus a controller is required to make the trolley reach the desired position fast with zero angular swing. The controllability and observability matrix is evaluated and found that though the system is not completely observable, it is completely controllable.

6.3 PID Response of 2 DOF Model

This section discusses the closed loop response of the 2 DOF model using a PID controller. PID controller has been chosen as a first experiment, because of its popularity and ease of use. Fig. 4 shows the trolley position and swing angle behavior of the PID controlled 2 DOF model for a unit step trolley driving control force, with and without a sinusoidal wind disturbance.

The trolley position output settles at 35 sec with a peak overshoot of 20%. Angular swing output, initially oscillates, settles at 90 sec with a peak overshoot of 80%. On applying an external disturbance (wind), the trolley position output remains unaffected, but angular swing oscillates about the set point, zero. It has been observed that with PID controller, the settling time of the container crane system is not within the acceptable standards and also it cannot control the system effectively in the presence of an external disturbance. So a better controller is required to minimize the settling time, adjust with the uncertainties in the container crane system and reject the disturbances. Sliding mode controller, which is a robust one, is a better option and it will be analysed next.

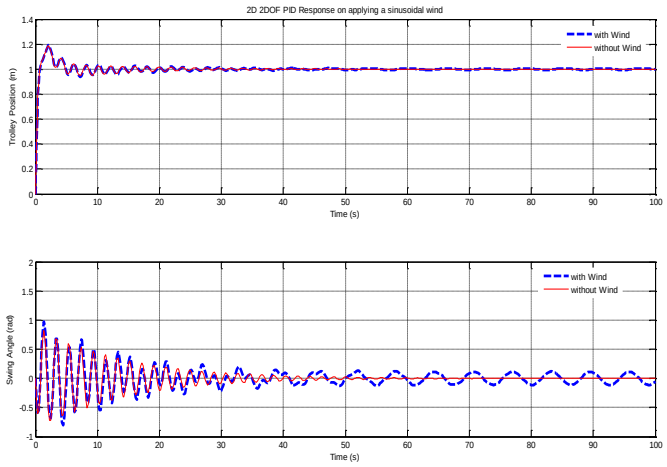

Fig. 4. PID Response of 2 DOF Model a. Trolley Position b. Swing Angle

6.4 SMC Response of 2 DOF Model

Fig. 5 shows the sliding surface, control input, trolley position and swing angle behavior of the sliding mode controlled 2 DOF model.

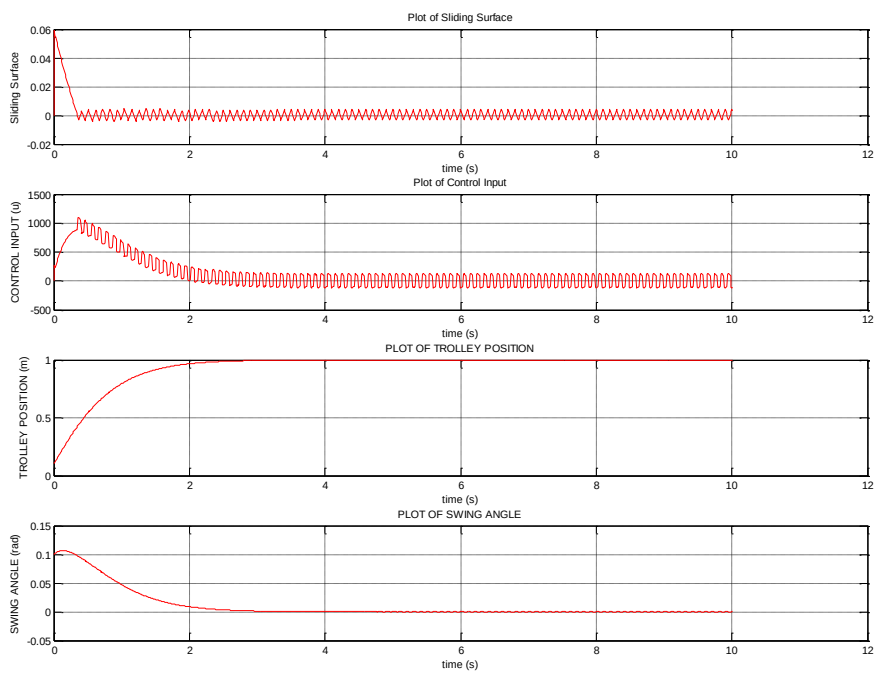

Fig. 5. SMC Response of 2 DOF Model
a. Sliding Surface b. Control Input c. Trolley Position d. Swing Angle

It takes about 0.5 sec for the system to reach the sliding surface. The control input -M*sign(s) makes the system to reach the sliding surface. The control input u_{eq} makes the system to stay on the sliding surface. Control input switches between two structures when s is close to zero, due to the sign function. This is called chattering, a disadvantage of SMC. It takes 2.7 sec for the trolley position output to reach the desired value - 1m, with no overshoot. With PID, it settles at 35 sec with a peak overshoot of 20%. It takes 3 sec for the swing angle output to reach the desired value, zero. With PID, it oscillates, then settles at 90 sec with a peak overshoot of 80%.

6.4.1 SMC Response of 2 DOF Model, with parameter variation

Fig. 6 shows the sliding surface, control input, trolley position and swing angle behavior of the sliding mode controlled 2 DOF model, when the payload mass is increased by 50 %.

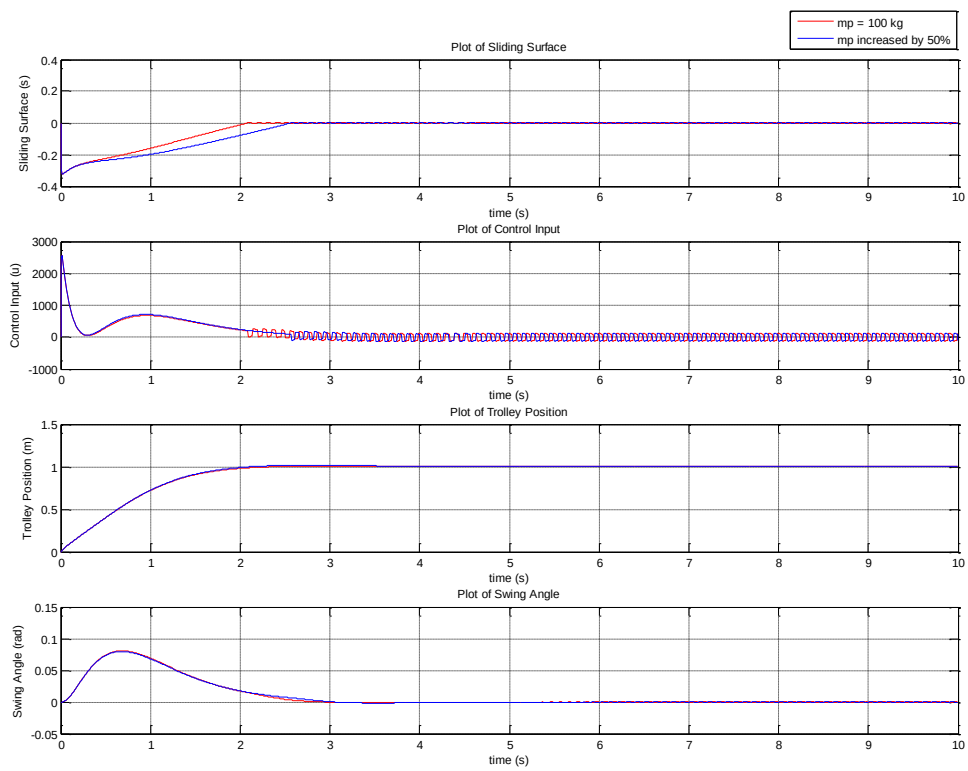

Fig. 6. SMC Response of 2 DOF Model
a. Sliding Surface b. Control Input c. Trolley Position d. Swing Angle

It takes just 0.5 sec more for the system to reach the sliding surface on a parameter change. The parameter variation does not affect the trolley position output and the swing angle output. Thus sliding mode controller is robust even to 50% parameter variation.

6.4.2 SMC Response of 2 DOF Model, applying a random wind disturbance throughout

Fig. 7 shows the sliding surface, control input, trolley position and swing angle behavior of the sliding mode controlled 2 DOF model, when a random (pseudorandom numbers from a normal distribution with mean 0 and standard deviation 0.01) wind disturbance is applied to the system throughout its operation.

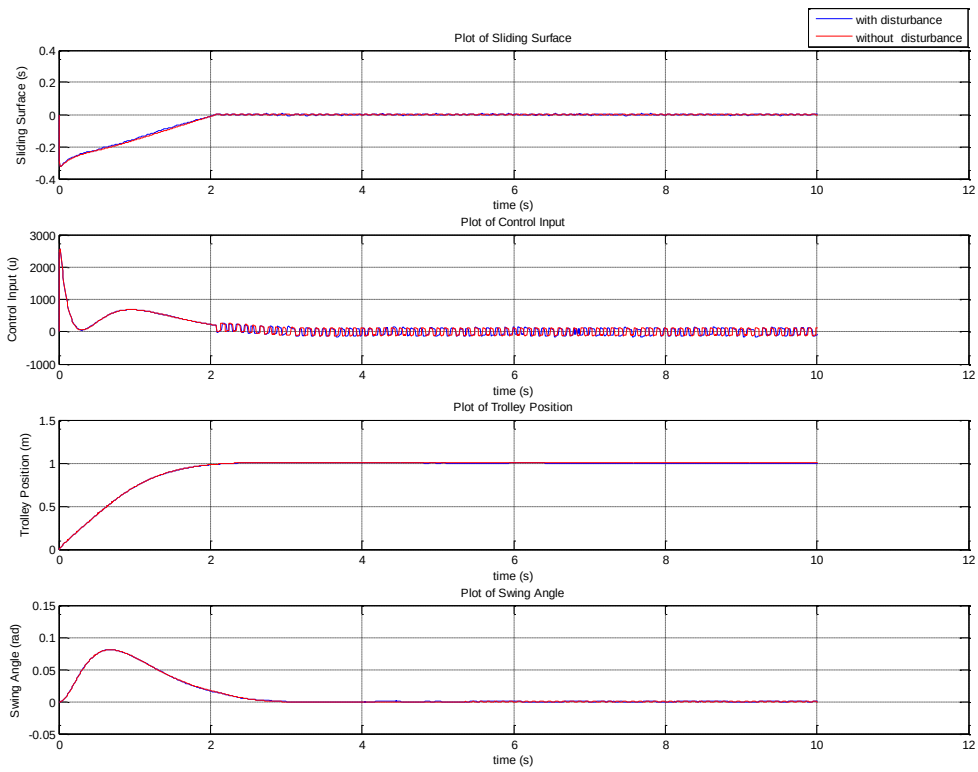

Fig. 7. SMC Response of 2 DOF Model with a random disturbance throughout
a. Sliding Surface b. Control Input c. Trolley Position d. Swing Angle

The external disturbance does not have an impact on the sliding surface and control input. The trolley position output and the swing angle output is unaffected by the wind disturbance. Thus sliding mode controller is robust to disturbance.

6.4.3 SMC Response of 2 DOF Model, applying a random wind disturbance after settling

Fig. 8 shows the sliding surface, control input, trolley position and swing angle behavior of the sliding mode controlled 2 DOF model, when a random (pseudorandom numbers from a normal distribution with mean 0 and standard deviation 0.01) wind disturbance is applied to the system after its settling time, say 5 sec.

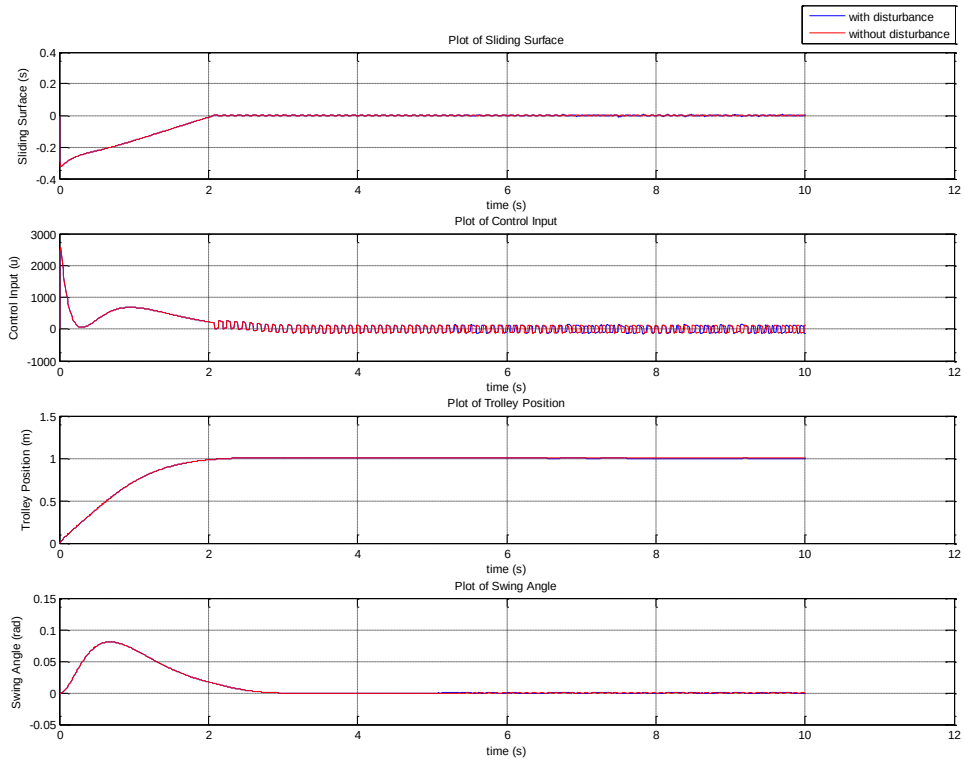

Fig. 8. SMC Response of 2 DOF Model with a random disturbance applied after 5 sec
a. Sliding Surface b. Control Input c. Trolley Position d. Swing Angle

The external disturbance does not have any impact on the sliding surface and control input. Also the trolley position output and the swing angle output is unaffected by the wind disturbance. Thus sliding mode controller is robust to the disturbance.

6.4.4 SMC Response of 2 DOF Model, on increasing the magnitude of disturbance

Fig. 9 shows the sliding surface, control input, trolley position and swing angle behavior of the sliding mode controlled 2 DOF model, when a random (pseudorandom numbers from a normal distribution with mean 0 and standard deviation 0.2) wind disturbance is applied to the system

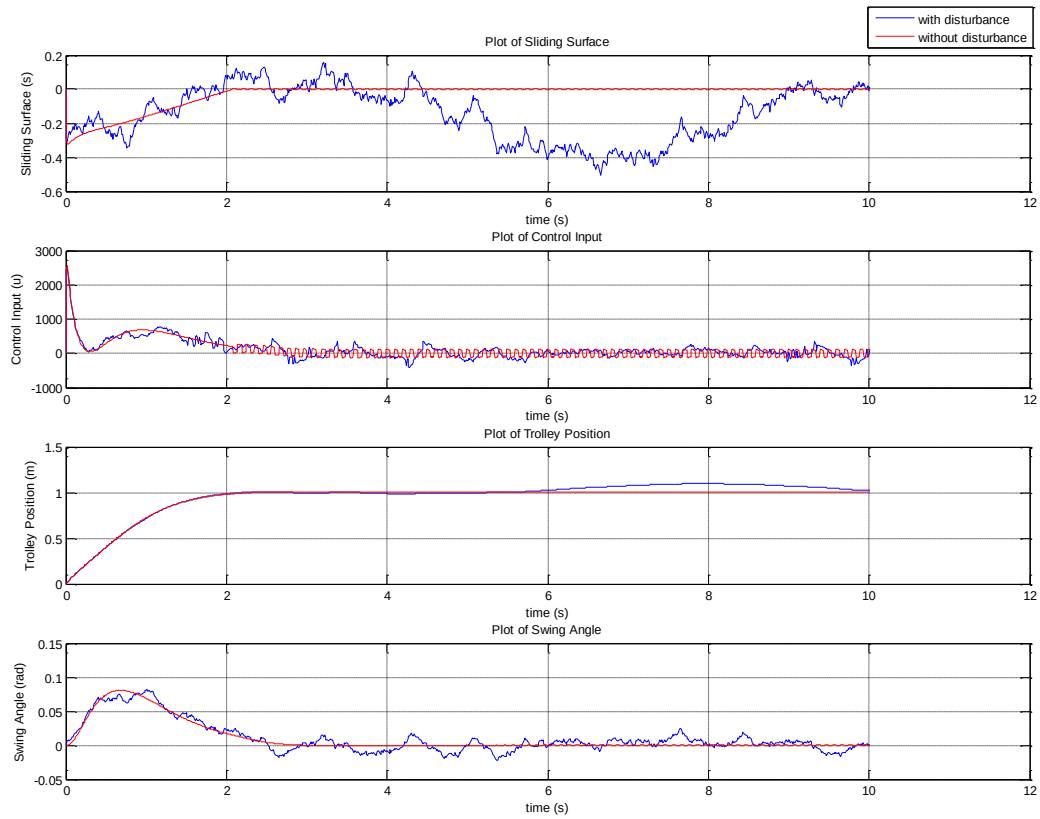

Fig. 9. SMC Response of 2 DOF Model on increasing the magnitude of disturbance
a. Sliding Surface b. Control Input c. Trolley Position d. Swing Angle

It has been observed that the robustness is lost on increasing the magnitude of disturbance. Thus there is a limit for the sliding mode controller to withstand the disturbance. It can be judiciously used after evaluating the maximum level of disturbances that occur in the system.

7. Conclusion and suggestions for future work

The open loop response, controllability and observability, closed loop response using a PID controller, Sliding Mode Controller of the 2 DOF model of the inshore container crane system was analysed in this paper. The open loop 2 DOF system is not stable – trolley position was unbounded and the swing angle exhibited an oscillatory behavior. Thus a suitable controller can be designed to drive the trolley at the desired position within a short time and with a zero or minimum angular swing of the payload. It had been observed that with PID controller, the

settling time of the container crane system was not within the acceptable standards and also it could not control the system effectively in the presence of an external disturbance and parameter variation. Sliding mode controller, a robust one, was analysed next to minimize the settling time, adjust with the uncertainties in the container crane system and reject the disturbances. It took only 2.7 sec for the trolley position output to reach the desired value - 1m, with no overshoot. With PID, it settled at 35 sec with a peak overshoot of 20%. It took 3 sec for the swing angle output to reach the desired value, zero. With PID, it oscillated, then settled at 90 sec with a peak overshoot of 80%. Also SMC has the advantage of being robust to parameter change and external disturbances.

Yet it has a disadvantage called chattering that causes high frequency oscillations of non-zero magnitude, which causes mechanical wear in the system and also actuates the unmodeled high frequency dynamics of system, thus deteriorating controller's performance. A solution to this chattering problem is an adaptive sliding mode, which will be the future work.

Reference

[1] http://www.igtpl.com/

[2] Q.H. Ngo K.-S. Hong, "Adaptive sliding mode control of container cranes," IET Control Theory Appl., 2012, Vol. 6, Iss. 5, pp. 662–668.

[3] Renuka V. S. & Abraham T Mathew.: 'Precise Modelling of a Gantry Crane System Including Friction, 3D Angular Swing and Hoisting Cable Flexibility', International Journal on Theoretical and Applied Research in Mechanical Engineering (IJTARME), ISSN : 2319 – 3182, Volume-2, Issue-1, 2013.

[4] Nguyen B. Do, Aldo A. Ferri, Olivier A. Bauchau, "Efficient Simulation of a Dynamic System with LuGre Friction", Journal of Computational and Nonlinear Dynamics October 2007, Vol. 2 / 281.

[5] IS 14467 : 1997 IS0 4302 : 1981 Indian Standard Cranes -Wind Load Assessment, Bureau of Indian Standards.

[6] Vadim I. Utkin, "Sliding Modes in Control and Optimization", Springer 1992.

Vibration Control of 3D Gantry Crane with Precise Positioning

Ajayan. M[1], Nishad. P.N[2]

Department of EEE, MES College of Engineering, Kuttippuram

[1]ajaymaly@gmail.com,[2]nishad82pn@yahoo.com,

Abstract

Vibrations are a common thing in flexible mechanical systems like robotic arm, gantry and tower crane system. A lot of researches are being carried out for reducing these mechanical vibrations. Input shaping is one of the most successful methods among them. The modeling of gantry crane in 3 dimension using Euler-Lagrange approach is done first. Input shaping using system inversion method is done to control the vibration and for precise positioning of the above derived system in 3 dimensions. It can done by specifying the required output function with required velocity and acceleration profile and designing an input function to achieve it. A third order exponential function is used here. Simulations are done on MATLAB. Simulated responses are position and sway angle of gantry crane. The performance is compared with the responses of a limited step response.

Key words: vibration control, input shaping, gantry crane, precise positioning, system inversion method.

1. Introduction

Vibration exists all around us. From the motion of a car as it travels over a series of bumps to the vibration of a tip of a manufacturing robot arm to the spinning of a computer's hard drive, vibrations are a part of everyday life. Many common engineering problems involve getting rid of or reducing the levels of vibrations. It is possible to reduce vibration by adding stiffness to the system, but that often adds cost and slows down the operation speed. A better solution is to intelligently choose a control strategy that minimizes residual vibration, yet still moves quickly. Vibrations exist in a large extent in flexible mechanical systems like gantry cranes. Gantry cranes are mechanical equipments used for handling heavy lifting in industrial and shipping areas. It consists of mechanical arms for carrying a bridge or rail upon which trolley carrying the payload will be moved using some electrical motors. It has got two horizontal and one vertical movement. During the motion of gantry cranes, we have to consider two main problems involved: the precise positioning of payload and reduction in the oscillation of payload.

A lot of studies and development has been done for meeting the above conditions. Input shaping is one of the best among those. Conventionally, input shaping was done by shaping the input by convolving the input sequence with a series of impulses so that there won't be any vibrations in the system. O.T.Cole and T.Wongratanaphisan proposed a new method of input shaping with the help of adaptive controller using FIR filters [1]. They used a FIR filter for generating the impulse sequence. .R.Heuy and W.singhose proposed another method of input shaping by placing it inside the feedback loop, which they termed as closed loop signal shaping [2]. In this technique, input shaper will be placed inside the feedback loop.A comparison study of input shapers with lowpass and notch filter was done by Singhose and Vaughan [3]. The constraints used to design low-pass filters, notch filters, and input shapers were categorized and compared.A controller enabling precise positioning and sway reduction was developed by Sorensen, Singhose and Dickersen [4].The control is comprised of distinct modules that have been combined into unified control architecture. Each module is designed to control one aspect of the crane's performance.

A new kind of input shaping called system inversion technique was first developed by A.Piazzi and A.Visioli in their paper [5]. They used a third order exponential function for representing input in terms of desired output. The main idea behind this technique is to design an input function based on desired output function based on the system model. They verified this method on mass-spring-damper system. This paper focuses on designing an input function for a 3D gantry crane system for controlling the position and angle in 3 dimensions. This is done by specifying the desired ouput functions.

2. Modeling of 3D Gantry crane system

This section deals with the modeling of gantry crane in 3 dimensions. Some assumptions are made to make the model less complex. The model of a gantry crane is shown in figure.1.

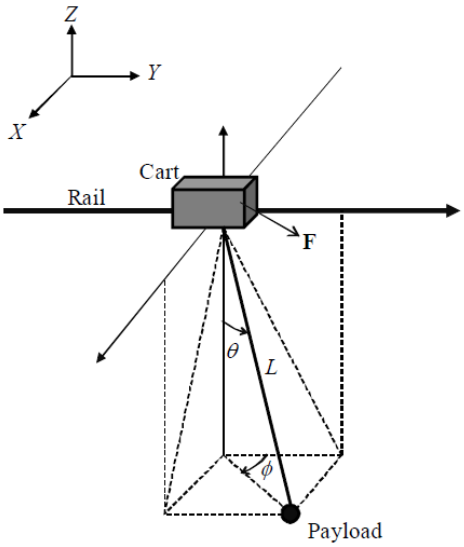

Figure.1 free body diagram of gantry crane

The notations used in the above diagram are explained below.

Θ and φ	: Swing angles of the rope.
L	: Length of rope
F	: Cart driving force
r_r ,r_c, r_p	: Position vector of rail, cart and payload
K_r, K_c, K_p	: Kinetic energy of rail, cart and payload
x,y	: Cart positions in X and Y directions
J	: Moment of inertia of payload
g	: acceleration due to gravity

Some assumptions have been considered for reducing the dynamic model of the above system. Some assumptions are listed below:

1. The cart friction force is ignored.
2. The cart and payload are considered as point masses.
3. The tension force that may cause the rope elongates is also ignored.
4. The motion of payload is restricted to two dimensions only.
5. The payload and trolley are connected by a mass less rigid cable.
6. External disturbances like wind are also neglected.
7. Viscous damping is also neglected.

2.1 Mathematical modeling

To derive the dynamic equations of motion of the 3-D overhead gantry crane system, the total energy associated with the crane system needs to be computed using the Lagrangian approach. Then, the Euler-Lagrange formulation is considered in characterizing the dynamic behavior of the crane system. Based on the figure 3.1, the position vector for rail, cart and payload can defined as below.

$$\begin{aligned} r_r &= [x, 0, 0] \\ r_c &= [x, y, 0] \\ r_p &= [x + L\sin\theta\sin\varphi, y + L\sin\theta\cos\varphi, -L\cos\theta] \end{aligned} \tag{1}$$

The total kinetic and potential energy of the system can be derived as

$$\begin{aligned} K = \frac{1}{2}(m_c + m_r + m_p)\dot{x}^2 + \frac{1}{2}(m_c + m_p)\dot{y}^2 + m_p L\cos\theta\sin\varphi\dot{x}\dot{\theta} + \\ m_p L\sin\theta\cos\varphi\dot{x}\dot{\varphi} + m_p L\cos\theta\cos\varphi\dot{y}\dot{\theta} - m_p L\sin\theta\sin\varphi\dot{y}\dot{\varphi} + \\ \frac{1}{2}(m_p L^2 + J)\dot{\theta}^2 + \frac{1}{2}(m_p L^2\sin^2\theta + J)\dot{\varphi}^2 \end{aligned} \tag{2}$$

$$P = -m_p g L\cos\theta \tag{3}$$

Using the Lagrangian approach, the Lagrangian of the system is given by

$$L = K - P \tag{4}$$

The Euler-Lagrangian formulation is given by

$$\frac{d}{dt}\left(\frac{\delta L}{\delta \dot{q}_i}\right) - \frac{\delta L}{\delta q_i} = F_i, \quad i = 1,2,3,4 \tag{5}$$

Where q is the states of the system and F is the input force and is given by

$$q = \begin{bmatrix} x \\ y \\ \theta \\ \varphi \end{bmatrix} \tag{6}$$

$$F = \begin{bmatrix} f_x \\ f_y \\ 0 \\ 0 \end{bmatrix} \tag{7}$$

Applying all the conditions, we can derive the complete model of the system and it is given below.

$$M(q)\ddot{q} + C(q,\dot{q})\dot{q} + \dot{G}(q) = F \quad (8)$$

After rearranging the above equation, we can get the final model of the system as below:

$$\ddot{q} = M^{-1}(-C\dot{q} - G + F) \quad (9)$$

The swing angles with reference to YZ plane, $\theta_x$and with respect to XZ plane, θ_y can be found as below

$$\theta_x = \tan^{-1}(tan\theta\ sin\varphi) \quad (10)$$

$$\theta_y = \sin^{-1}(sin\theta\ cos\varphi) \quad (11)$$

2.2 Linearisation of gantry crane model

The derived model which is represented in matrix form is a nonlinear model.The equations of motions are nonlinear is due to the presence of the trigonometric terms such as sin and cosas well as the quadratic term. Hence, to do the linearization, the Taylor series expansion is used:

$$sin\theta \approx sin\theta_0 + cos\theta_0(\theta - \theta_0) \quad (12)$$

Assume swing angle, θ is very small, hence $\theta_0 = 0$and so $sin\theta = \theta$ and similarilycosθ=1. By applying all these conditions in the above derived non linear model of gantry crane, we can get the linear model.

$$f_x = (m_p + m_r + m_c)\ddot{x} + mp * l * \ddot{\theta} \quad (13)$$

$$(m_p l^2 + J)\theta + \ddot{m}_p gl\theta = 0 \quad (14)$$

3. System inversion technique

In this section, the basic idea about system inversion method and its application on gantry crane method will be explained. System inversion based method reverse the process by specifying the systemoutput function and deriving the input. In this way, the designer can choose the speedand shape of the motion within the limitations of the drive system. In the present study,in order to control the motion after the end-point, it is necessary to use output functionwith only one parameter and this leads to a much simpler input function. The singleparameter of this output function determines the motion speed and is limited only by thedrive system constraints.

The function representing the point-to point motion must be differentiable and continuous at least up to second order derivatives where the velocity and acceleration at the start and at the arrival of the destination are zero and remain zero. Asymptotic behavior is desired when approaching the final position in order to stay there and exponential functions is

the best solution. The third-order exponential function for the output motion is examined to move the system from zero to XE.

$$x(t) = \left(1 - e^{-(\propto t)^3}\right)\text{XE} \tag{15}$$

Inorder to generalize the analysis, normalized time u is defined as:

$$U=\alpha t \tag{16}$$

This gives the following normalized equations of the desired motion:

$$X(u) = \frac{X(t)}{X(e)} = 1 - e^{-u^3} \tag{17}$$

And the derivatives are

$$\dot{X}(u) = 3 * u^2 * e^{-u^3} \tag{18}$$

$$\ddot{X}(u) = (6 * u - 9 * u^2)e^{-u^3} \tag{19}$$

By applying the desired outputs functions for position, velocity and acceleration into the equation for gantry crane model, we can get a new set of equations for the shaped input function like below

$$F(u) = \left(m_p + m_r + m_c\right)\alpha_1^2 \ddot{x(u)} + mp * l * \alpha_2^2 \ddot{\theta} \tag{20}$$

Shaped input force function in x-direction:

$$F_1(u) = \left(m_p + m_r + m_c\right)\alpha_1^2 (6u - 9u^4)e^{-u^3} \tag{21}$$

Shaped input force function in y-direction:

$$F_1(u) = \left(m_p + m_c\right)\alpha_1^2 (6u - 9u^4)e^{-u^3} \tag{22}$$

Now, if we have to move the system to another position, let ‘d’metres from reference position, then the equations for the input function can be expressed as below

$$X(u) = d * (1 - e^{-u^3}) \tag{23}$$

$$\dot{X}(u) = d * (3 * u^2 * e^{-u^3}) \tag{24}$$

$$\ddot{X}(u) = d * [(6 * u - 9 * u^2)e^{-u^3}] \tag{25}$$

The above derived are the shaped input functions for the nonlinear gantry crane system for giving the required output. The result will be discussed in the next section.

4. Result Analysis

The parameters used for gantry crane model is adopted from the thesis work of Hanafy.M.Omar [10].

Payload mass, mp=0.73 Kg

Trolley mass, mc=1.06 Kg

Rail mass, mr=6.4 Kg

Length of rope,l=0.7 m

The shaped input force function in x and y direction, fx and fy is shown in the plots below

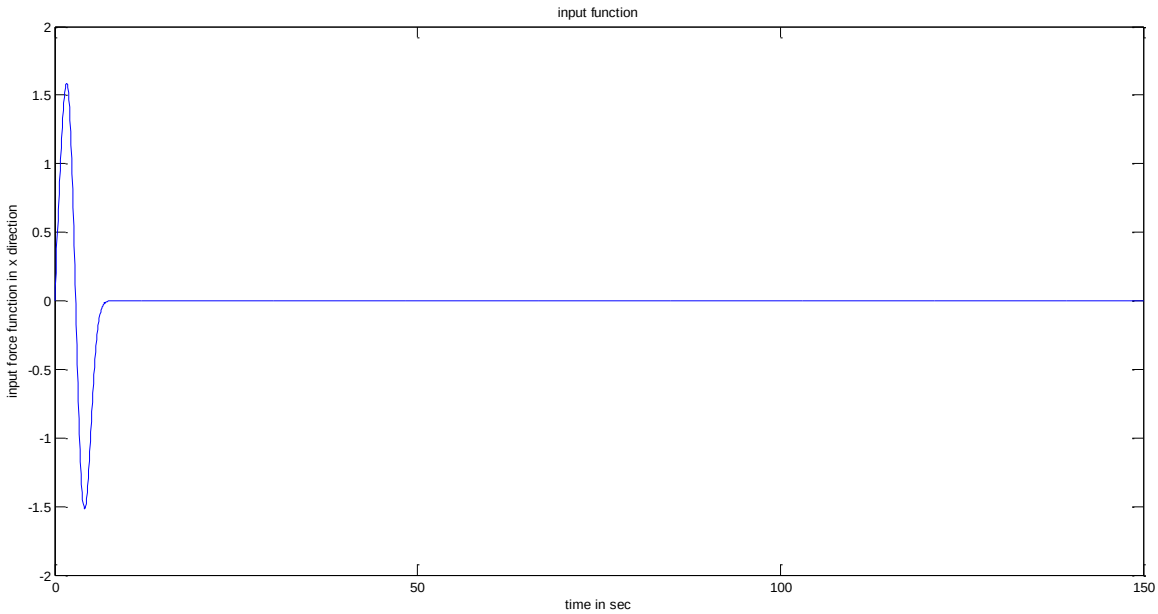

Figure.2 Input force function in x direction

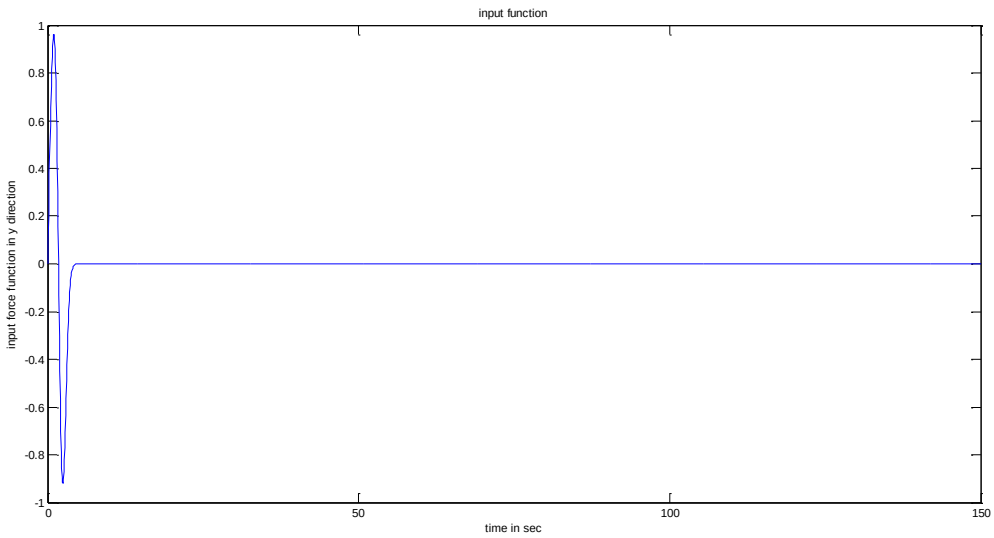

Figure.3 input force function in y ddirection

By giving these input as the force in two directions, we can have the desired outputs as below:

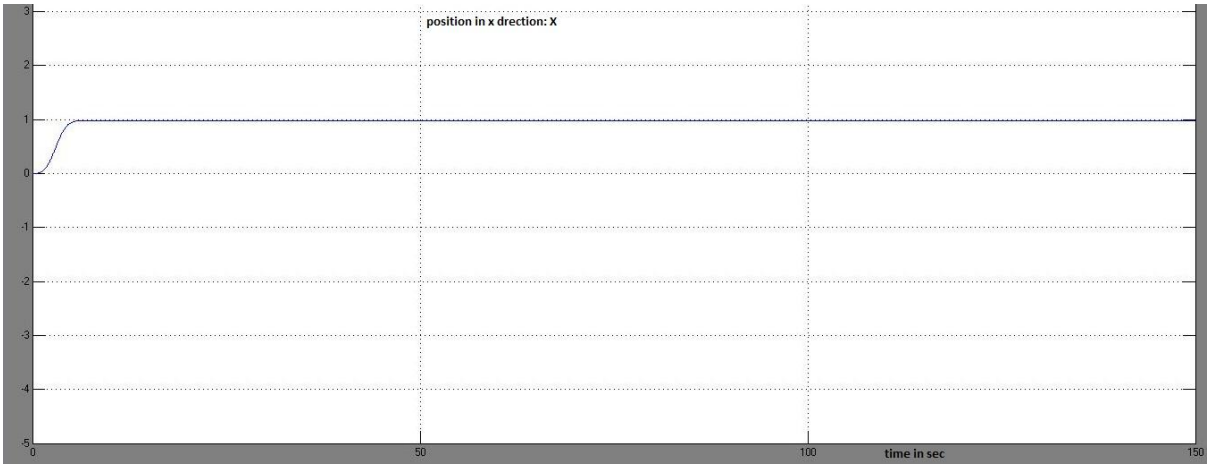

Figure.4 Displacement output in x direction

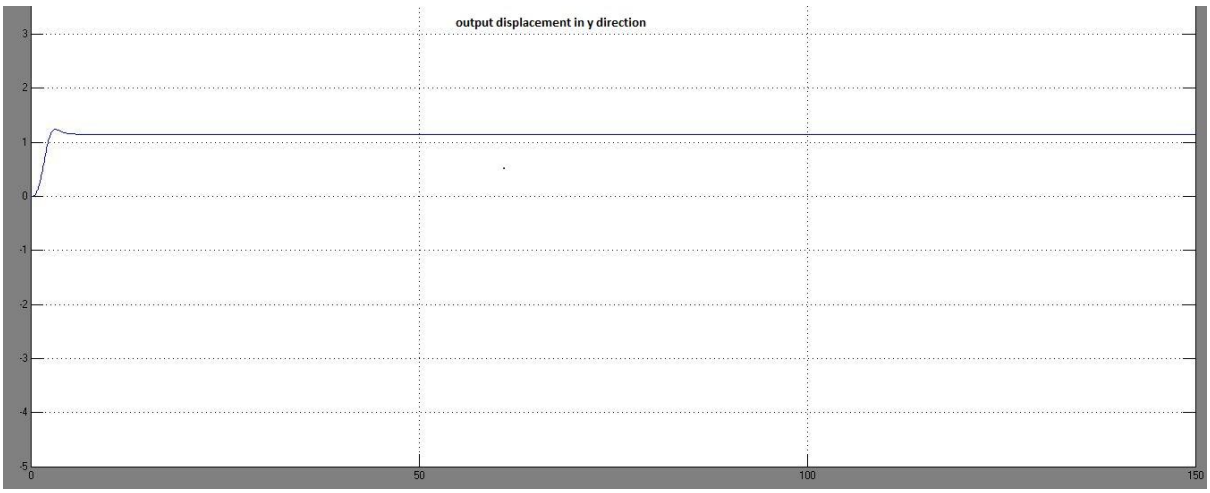

Figure.5 Displacement output in y direction

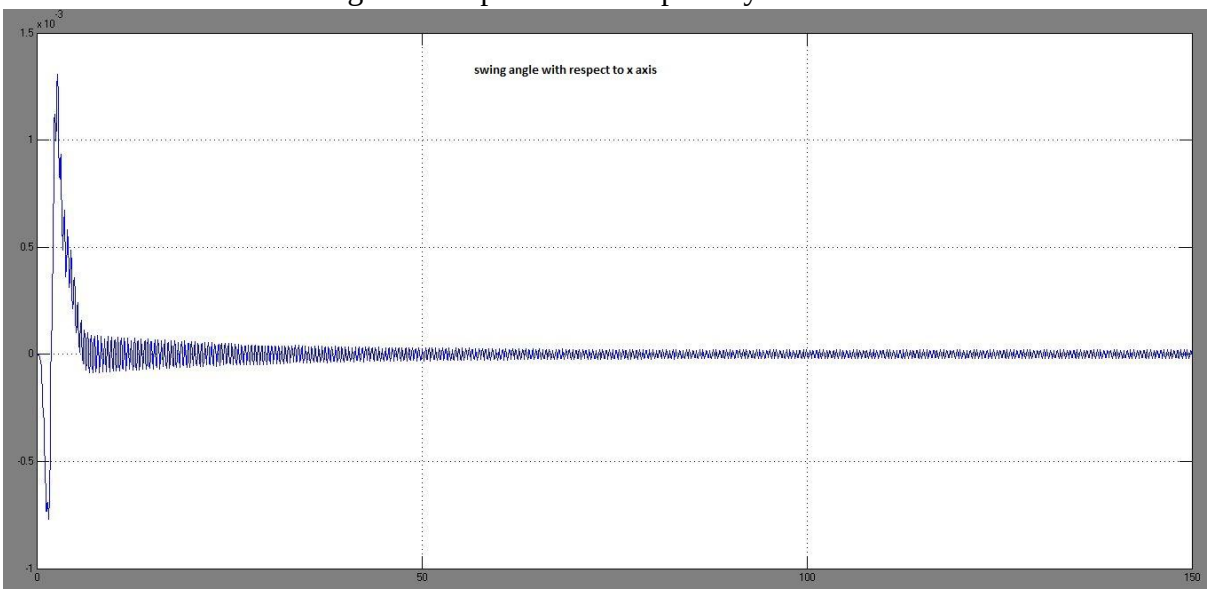

Figure.6 Swing angle in x direction

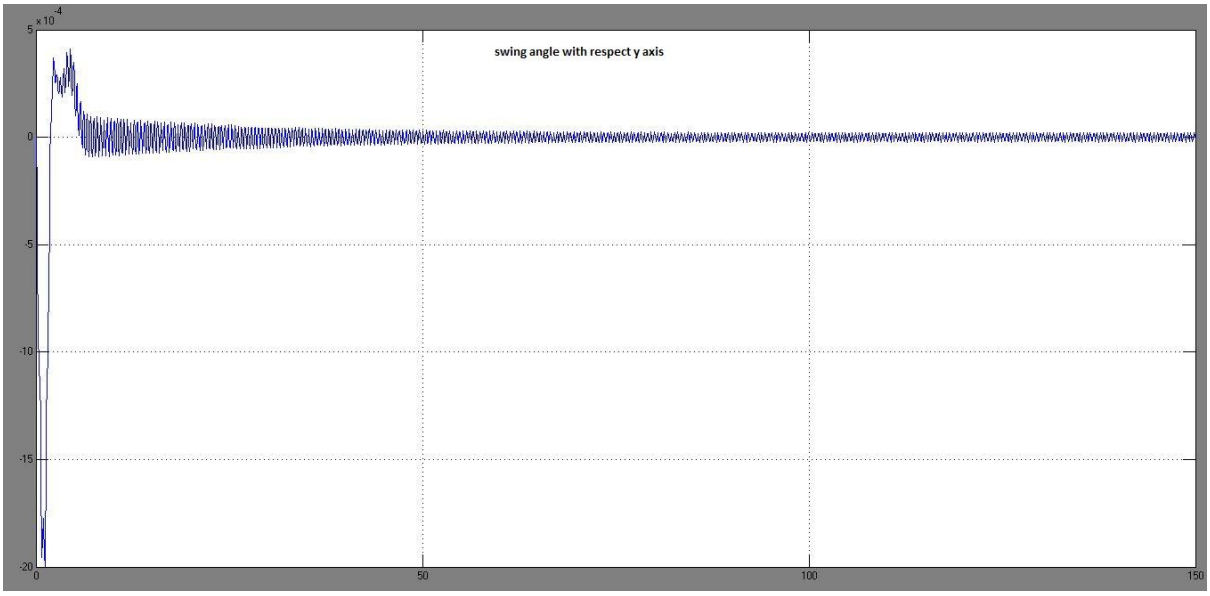

Figure.7 Swing angle in y direction

From the above plots, it can be clearly seen that the gantry crane can be positioned at any desired without very minute oscillations in the payload.

5. Conclusion

A new and effective method for precise positioning with reduced vibration for the gantry crane, named system inversion based input shaping method was designed and simulated. A mathematical modeling in 3 dimensions was done for gantry crane. The shaped input force function for both the direction is designed. The outputs were verified and plotted by giving these input functions to the gantry crane system. The inputs and outputs are simulated using MATLAB/SIMULINK. From the plots, the proposed method is seen to be very effective.

Reference

[1] Mathew.O.T.Cole and Theeraphong Wongratanaphisan," A Direct Method Of Adaptive FIR Input Shaping For Motion Control With Zero Residual Vibration." *IEEE/ASME Transactions on Mechatronics*, Vol.18, No.1, Feb 2013

[2] John R Huey and William Singhose, " Trends in the stability properties of CLSS controllers: A root locus analysis," *IEEE Transactions in control systems technology*, VOL. 18, NO. 5, Sep 2010.

[3] W.Singhose and J.Vaughan,"Reducing vibration by digital filtering and input shaping," *IEEE Transactions on control systems technology*, VOL.19, NO.6, Nov 2011.

[4] Khalid L. Sorensen, William Singhose, Stephen Dickerson," A controller enabling precise positioning and sway reduction in bridge and gantry cranes," *Control Engineering Practice 15 (2007) 825–837.*

[5] Aurelio Piazzi," *Minimum time system inversion based motion planning for residual vibration reduction*" IEEE/ASME TRANSACTIONS ON MECHATRONICS, VOL. 5, NO. 1, MARCH 2000.

[6] P.Iravani and M.N.Sahinkya,"*Variable velocity exponential input shaping for position controlled robotic system*" Proceedings of the ASME 2010 Dynamic Systems and Control Conference September 12-15, 2010, Cambridge, Massachusetts, USA

[7] Sungsoo Rhim, *Member, IEEE,* and Wayne J. Book*,"* Adaptive Time-Delay Command Shaping Filter for Flexible Manipulator Control," IEEE/ASME Transactions on mechatronics, VOL. 9, NO. 4, Dec 2004

[8] Renuka V. S. & Abraham T Mathew ," Precise Modelling of a Gantry Crane System Including Friction, 3D Angular Swing and Hoisting Cable Flexibility," thesis work, Electrical engineering department, NIT Calicut.

[9] R.M.T. Raja Ismail, M.A. Ahmad, M.S. Ramli, F.R.M. Rashidi," Nonlinear Dynamic Modelling and Analysis of a 3-D Overhead Gantry Crane System with System Parameters Variation," Faculty of electrical and electronics engineering, university of Malaysia.

[10] Hanafy M. Omar," Control of Gantry and Tower Cranes," doctoral thesis, Virginia institute of technology.

Robust Design Of Gantry Crane

Sajitha K S[#1], Roshin.R[*2]

[#]PG Scholar

Department of Electrical &Electronics Engg
MES College of Engineering Kuttipuram
Kerala,India

[1]*sajithaks59@gmail.com*

**Assisitant Professor*

Department of Electrical &Electronics Engg
MES College of Engineering Kuttipuram
Kerala,India

[2]*eeroshin2008@gmail.com*

Abstract

A crane system offers a typical control problem being an under actuated MIMO system. In crane system, the number of variables to be controlled (the payload position and the swing angle) is less than that of control inputs (the forces driving the trolley and the girder) In this paper the precise modeling of a 2D gantry crane system is considered. The system is considered as trolley-pendulum system having one input, namely: input to the trolley motor and two outputs, which are: the trolley displacement and swing angle of the payload. The control objective is to suppress and eliminate the unwanted output i.e angular swing of payload while the load is transported and delivered accurately, all in minimum time. The system was familiarized using a simple dynamic model obtained using Lagrange's equations of motion. Model predictive control implemented to maintain the system in a stable position. Designing and simulations are carried out and results prove effectiveness of the proposed methods.

Key words: ***Gantry crane, MPC***

1. Introduction

Cranes are widely used in industry for transportation of heavy loads. The crane acceleration always induces undesirable load swings [2]. Load hoisting also tends to aggravate the load swing. The load swing causes efficiency drop, load damages, and even accidents. Cranes are becoming larger, faster and higher, requiring efficient controllers to guarantee fast response and also to meet safety requirements. The number of the control inputs for a crane system is by nature less than that of the system outputs, which makes the related control problems complicated [1]. There are different types of crane systems in use, out of which the gantry crane system is posing a typical control problem

The aim of the present study is to control the system to obtain a precise displacement of the trolley, with negligible or zero angular swing of the load, all in minimum time . In this work, a 2D model of gantry crane is introduced. Model Predictive Control, or MPC, is an advanced method of process control that has been in use in the process industries [8]. Here future values of output variables are predicted using a dynamic model of the process and current measurements

Methodology

The work aims to control a gantry crane system using MPC. A linear model of a gantry crane system with 2 degrees of freedom is to be developed [7]. Then MPC is designed and tested on the linear model [4]. The performance of the control technique is to be analyzed through extensive simulation. MPC tool is based on iterative, finite horizon optimization of a plant model. Model predictive control systems are designed based on a mathematical model of the plant. The model to be used in the control system design is taken to be a state-space model. By using a state-space model, the current information required for predicting ahead is represented by the state variable at the current time.

2.2D MODEL OF GANTRY CRANE

The trolley-pendulum model of a 2 degree of freedom (displacement of trolley and angular swing of payload) gantry crane system [2] is shown in Fig.2.1. Here the trolley and the load are considered as point masses and are assumed to move in a 2D plane. Here,

x = Horizontal displacement of trolley from reference (m).

θ = Angular swing of the payload (rad).

m_1= mass of the payload (kg).

m_2= mass of the trolley (kg).

F_x= force applied on the trolley (N).

T = input torque (Nm).

l= length of the cable (m).

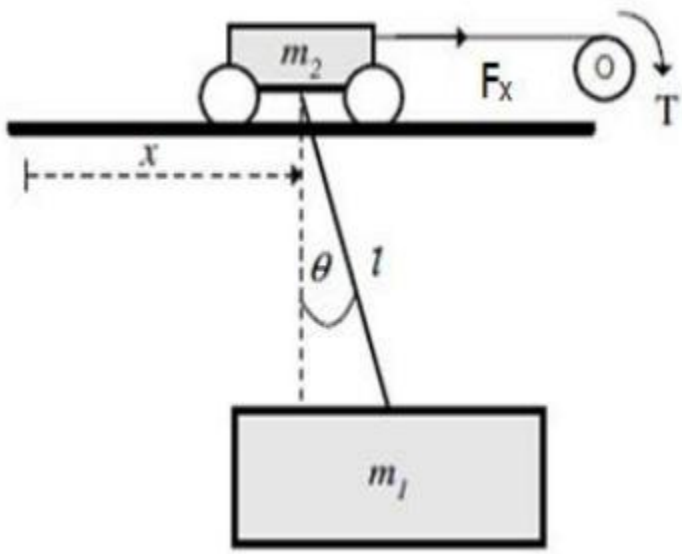

Fig.1 Trolley-pendulum 2D model of gantry crane system[3]

For the under actuated system, force F is the single input and trolley displacement x and angular swing θ are the two outputs [7].

2.3 ASSUMPTIONS

The assumptions taken for deriving the dynamic equations of the model are the following [2]:

1. Payload and trolley are connected by a mass less rigid rod.

2. Length of the rod is constant (no load hoisting).

3. Mass and position of trolley and payload are known.

4. All frictional elements in trolley and hoist motions are negligible.

5. The rod elongation is negligible.

6. Trolley and load moves in a 2D plane.

7. Viscous damping is neglected.

External disturbances such as wind are neglected.

We get the Lagrangian equations representing the dynamic model of the system as [5],

$$(m_1 + m_2)\ddot{x} + m_1 l\left(\ddot{\theta}\cos\theta - \dot{\theta}^2 \sin\theta\right) = F_x \tag{2.1}$$

$$l\ddot{\theta} + \ddot{x}\cos\theta + g\sin\theta = 0 \tag{2.2}$$

Assuming θ(t) to be very small, we get the following linearized model

$$(m_1 + m_2)\ddot{x} + m_1 l\ddot{\theta} = F_x \tag{2.3}$$

$$l\ddot{\theta} + \ddot{x} + g\theta = 0 \tag{2.4}$$

The state space model is obtained as,

$$A = \begin{bmatrix} 0 & 1 & 0 & 0 \\ 0 & 0 & \frac{m_1}{m_2}g & 0 \\ 0 & 0 & 0 & 1 \\ 0 & 0 & -\frac{m_1+m_2}{m_2 l}g & 0 \end{bmatrix}; \qquad B = \begin{bmatrix} 0 \\ \frac{1}{m_2} \\ 0 \\ -\frac{1}{m_2 l} \end{bmatrix}; \tag{2.5}$$

$$C = \begin{bmatrix} 1 & 0 & 0 & 0 \\ 0 & 1 & 0 & 0 \end{bmatrix}; \qquad D = [0].$$

The two outputs of the system include the trolley displacement and angular swing of the payload. The simulated outputs are shown in Fig.2. and Fig.3.

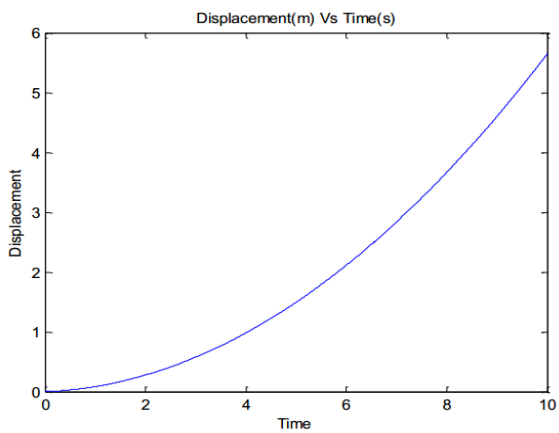

Fig.2. Displacement output x(t)

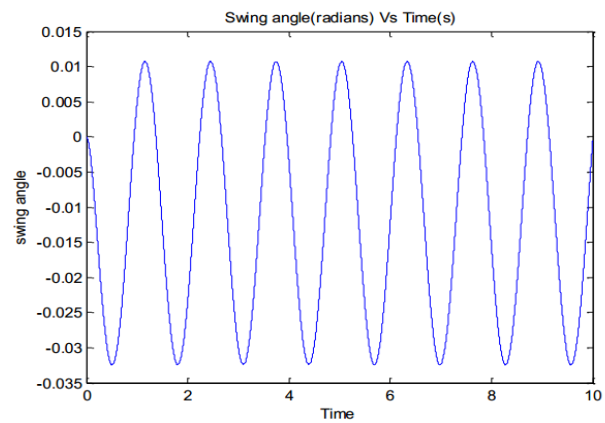

Fig.3. Swing angle output θ(t)

It is clear that displacement output x(t) (Fig.2.) is unbounded and the angular swing output θ(t) (Fig.3) is un damped oscillations showing the vibratory motion of the payload caused due to the trolley movement

3. Model Predictive Control

Model predictive controllers rely on dynamic models of the process, most often linear empirical models obtained by system identification [8]. MPC models predict the change in the dependent variables of the modeled system that will be caused by changes in the independent variables. MPC uses the current plant measurements, the current dynamic state of the process, the MPC models, and the process variable targets and limits to calculate future changes in the independent variables. These changes are calculated to hold the dependent variables close to target while honoring constraints on both independent and dependent variables.

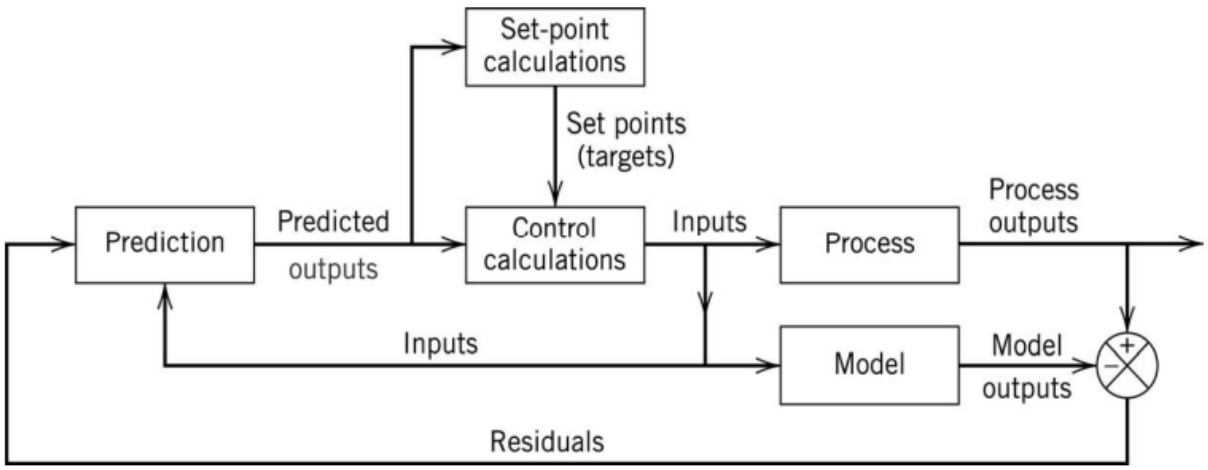

Fig.4. Basic Block Diagram of Model Predictive Control

The Model Predictive Control design generates a discrete-time controller [8]—one that takes action at regularly spaced, discrete time instants. The sampling instants are the times at which the controller acts. The interval separating successive sampling instants is the sampling period, Δt (also called the control interval).

This system has been operating for many sampling instants. Integer k represents the current instant. As is usually the case, a zero-order hold receives each move from the controller and holds it until the next sampling instant, causing the step-wise variations. To calculate its next move, u_k the controller operates in two phases: Estimation and Optimization When it's finished calculating, the controller sends move u_k to the plant. The plant operates with this constant input until the next sampling instant, Δt time units later. The controller then obtains new measurements and totally revises its plan. This cycle repeats indefinitely.

3.2 Controller Design

Consider the discrete state space equation as

$$x_m(k+1)=A_m x_m(k)+B_m u(k); \quad y(k)=C_m x_m(k) \tag{3.1}$$

Where u is the manipulated variable or input variable; y is the process output and x_m is the state variable vector with assumed dimension n_1.Thus it is need to change the model to suit design purpose in which an integrator is embedded [8].

Taking a difference operation on both sides of (3.1), we obtain that

$$x_m(k+1)-x_m(k)=A_m(x_m(k)-x_m(k-1)) +B_m(u(k)-u(k-1)) \quad (3.2)$$

Let us denote the difference of the state variable by

$$\Delta x_m(k+1) =x_m(k+1)-x_m(k);\ \Delta x_m(k)=x_m(k)-x_m(k-1) \quad (3.3)$$

And the difference of the control variable by

$$\Delta u(k)=u(k)-u(k-1). \quad (3.4)$$

These are the increments of the variables $x_m(k)$ and $u(k)$. With this transformation, the difference of the state-space equation is:

$$\Delta x_m(k+1) =A_m\Delta x_m(k)+B_m\Delta u(k) \quad (3.5)$$

Similarly

$$y(k+1)-y(k)=C_m(x_m(k+1)-x_m(k)) =C_m\Delta x_m(k+1)=C_mA_m\Delta x_m(k)+C_mB_m\Delta u(k) \quad (3.6)$$

Putting together

$$\begin{bmatrix}\Delta x_m(k+1)\\ y(k+1)\end{bmatrix}=\begin{bmatrix}A_m & 0\\ C_mA_m & I\end{bmatrix}\begin{bmatrix}\Delta x_m(k)\\ y(k)\end{bmatrix}+\begin{bmatrix}B_m\\ C_mB_m\end{bmatrix}\Delta u(k) \quad (3.7)$$

$$y(k)=[0 \quad 1]\begin{bmatrix}\Delta x_m(k)\\ y(k)\end{bmatrix} \quad (3.8)$$

The triplet (A,B, C) is called the augmented model, which will be used in the design of predictive control [4].

Next step in the design of a predictive control system is to calculate the predicted plant output with the future control signal as the adjustable variable. The future control trajectory is denoted by $\Delta u(k_i),\Delta u(k_i+1),\ldots,\Delta u(k_i+Nc-1)$

Where N_c is called the control horizon dictating the number of parameters used to capture the future control trajectory. With given information $x(k_i)$,the future state variables are predicted for N_p number of samples, where N_p is called the prediction horizon.

Based on the state-space model (A,B, C), the future state variables are calculated sequentially using the set of future control parameters:

$x(k_i+1|k_i)=Ax(k_i)+B\Delta u(k_i)$

$x(k_i+2|k_i)=Ax(k_i+1|k_i)+B\Delta u(k_i+1)=A^2x(k_i)+AB\Delta u(k_i)+B\Delta u(k_i+1).$

$x(k_i+Np|k_i)=AN_px(ki)+AN_p-1B\Delta u(k_i)+AN_p-2B\Delta u(k_i+1)+...+AN_p-N_cB\Delta u(k_i+Nc-1).$ (3.9)

From the predicted state variables, the predicted output variables are, by substitution

$y(k_i+1|k_i)=CAx(k_i)+CB\Delta u(k_i)$ (3.10)

$y(k_i+2|k_i)=CA^2x(k_i)+CAB\Delta u(k_i)+CB\Delta u(k_i+1)$

$y(k_i+Np|k_i)=CAN_px(k_i)+CAN_p-1B\Delta u(k_i)+CAN_p-2B\Delta u(k_i+1)+...+CAN_p-N_cB\Delta u(k_i+Nc-1).$

(3.11)

Collecting (3.10) and (3.11) together in a compact matrix form as

$Y=Fx(k_i)+\Phi\Delta U$ (3.12)

For a given set-point signal $r(k_i)$at sample time k_i, within a prediction horizon the objective of the predictive control system is to bring the predicted output as close as possible to the set-point signal, where we assume that the set-point signal remains constant in the optimization window. This objective is then translated into a design to find the 'best' control parameter vector ΔU such that an error function between the set-point and the predicted output is minimized. The optimal solution of the control signal is linked to the set-point signal $r(k_i)$and the state variable $x(k_i)$ via the following equation:

$\Delta U=(\Phi^T\Phi+R)^{-1}\Phi^T(R_sr(k_i)-Fx(k_i))$ (3.13)

4. Results and Discussion

The simulation result is shown below. Control horizon is selected to be N_c =4and prediction horizon is N_p=20. The initial state variable for the system is x_m=0; and the initial state feedback

variable is X_f=0; set-point signal is specified and the number of simulation points is specified as 100. It is clear that the model predictive control scheme is providing better position and anti-swing control.

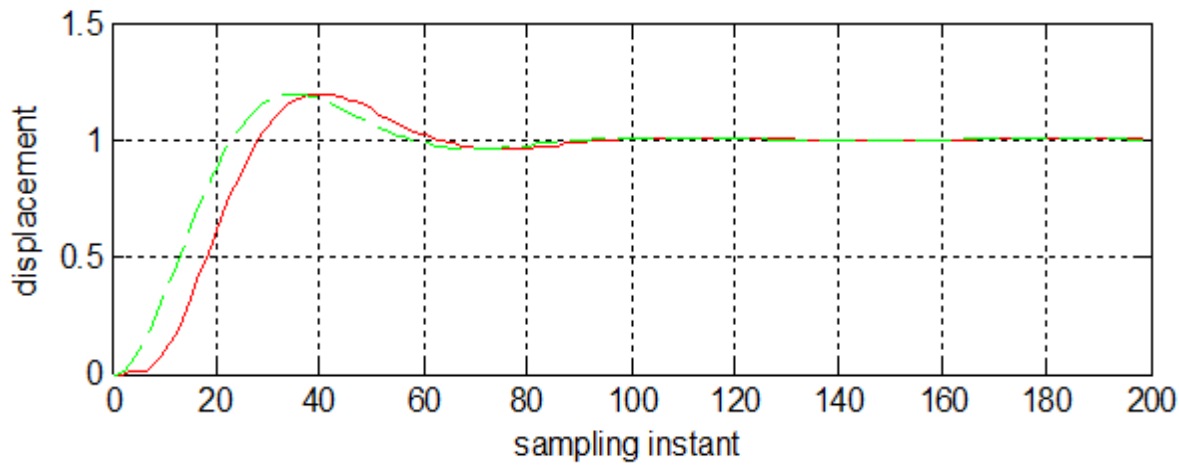

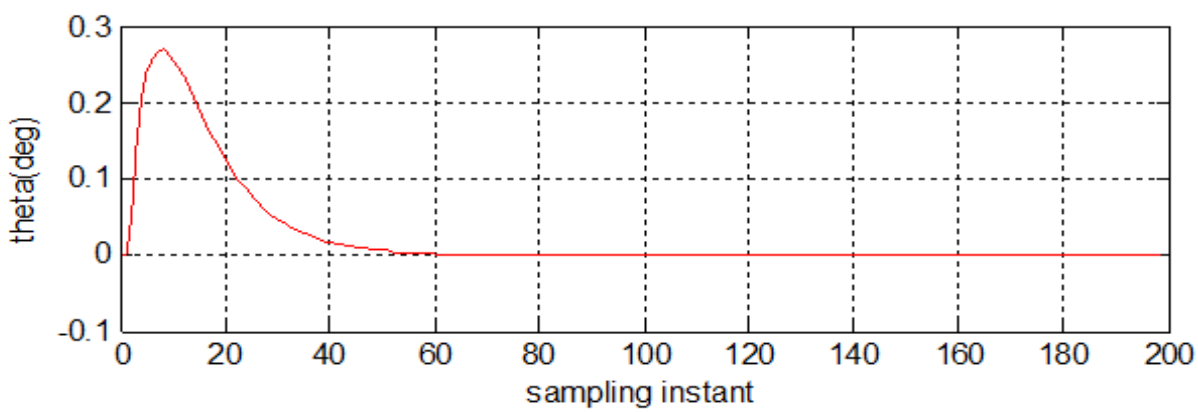

5. Conclusion

The main objective of this work is to design robust, fast, and practical controllers for gantry crane. The controllers are designed to transfer the load from point to point as fast as possible and at the same time, the load swing is kept to be small during the transfer process and it must completely vanish at the load destination for precise positioning of payload. Model predictive control gives fast suppression of load swing and precise trolley displacement.

References

[1] Yongchun Fang, Bojun Ma, Pengcheng Wang, and Xuebo Zhang," A Motion Planning-Based Adaptive Control Method for an Underactuated Crane System",*IEEE Trans on control systems technology*, vol. 20, no. 1, Jan 2012.

[2] Eihab M Abdel-Rahman, Ali H Nayhef, Ziyad N Mosoud, "Dynamics and control of Cranes: A review", *Journal of Vibration and Control*, vol 9, pp: 863-908, 2003.

[3] L.Eriksson, V.Holtta, M.Misol, "Modelling, Simulation and control of a Laboratory-scale Trolley-crane System", 47th Conference on Simulation and Modelling, September 2006,Helsinki,Finland.

[4]Liuping Wang,Model Predictive Control System Design and Implementation using MATLAB, Springer-Verlag London Ltd, Third edition,2009

[5] Ho-Hoon Lee," Modeling and Control of a Three-Dimensional Overhead Crane," *Journal of Dynamic Systems, Measurement, and Control*, vol.120, pp:470-476, Dec 1998.

[6] Sigurd Skogestard and Ian Postlethwaite, Multivariable Feedback Control-Analysis and Design, John Wiley & Sons, Ltd, second edition, 2005.

[7] Hanafy M. Omar, "Control of Gantry and Tower Cranes", PhD dissertation Faculty of the Virginia Polytechnic Institute and State University, USA, 2003.

[8] E. F. Camacho and C. Bordons, Model Predictive Control. Springer, New York, 2004

WIRELESS CONTROL SYSTEM FOR INDUSTRIES

Jayalakshmi.B

Assoc.Professor, IC Dept

N.S.S. College of Engineering, Palakkad-8
b_jayahari@yahoo.com

Haritha.H

S7 EEE,N.S.S. College of Engineering, Palakkad-8

parunandhanam@gmail.com

Abstract

In this paper, advantages of a wireless control system for process industry are discussed and a wireless control model is suggested for the industry. Wireless control systems are now becoming a relevant topic in the field of critical process control in industrial plants and oil/gas refineries. Wireless sensors are used for the study. Advantages of these wireless sensor networks are no wiring constraints, easy maintenance and reduced cost. Process monitoring and control is a combination of architectures, mechanisms, and algorithms used in the industry to achieve a specific goal. Failure of a control loop may cause spontaneous plant shutdown or even severe accidents in the plants. Recently wireless communication technology combined with sensors is introduced in the industry. Wireless sensor network (WSN) technology has demonstrated a great potential for industrial, commercial, and consumer applications. Specifically, in process monitoring and control, process data such as pressure, humidity, temperature, flow, level, viscosity, density and vibration intensity measurements can be collected through sensing units and transferred wirelessly to a control system for operation and management. Adopting WSNs for process monitoring and control provides great advantages over traditional wired system. The preliminary applications are mainly focused on process monitoring instead of closed-loop process control. Process control devices such as temperature sensors, valves, and motors are now equipped with wireless transmitters. However, common network standard and complete wireless process control systems were not yet available. The present study is emanated from the urge to improve the efficiency and to reduce the space required for the system, observing the demerits of the contemporary control method used in the process industry.

Key words: Wireless control, Wireless sensor networks, Process, ICT, Microcontroller.

1. Introduction

In every process, a control system is required to control the amount of raw materials to achieve the optimum production. To manufacture maximum possible products with minimum cost a number of physical variables are to be controlled. At the outset, the desired values of those physical variables must be determined and controllers are used to realize the target by controlling the manipulated variable. In early days manual operated systems are used in industry. This obviously results in errors. To overcome these errors, automatic control systems are then used in industry. Recent trend in industrial control systems are distributed control system with HEART protocol system and programmable logic controllers (PLC's). In all these cases a particular control system is required to control a particular variable. Therefore in industry a huge number of control systems are required for the smooth running of the process. Being wired systems, these things require large space and have high cost. Industries can be get rid of these complexities by introducing wireless control systems. With this a process can be controlled from far away locations.

2. Wireless control system

At the outset, the previous literatures in WSN have been referred to recognize about its merits and demerits. A number of studies have been carried out to overcome the demerits of the WSN's. Operational lifetime of WSN nodes is crucial in a variety of monitoring applications [1]. As an omnipresent technology, general issues regarding WSNs have been extensively researched in the academic arena. Wireless transmission of data has been utilized for over ten years in process control applications such as SCADA. However, industrial WSN products for process monitoring and control are not commercially available until recently due to its specific requirements and challenges [2]. A wireless communication system has a number of advantages, not least the mobility of the devices within the environment. WSN is generally used in various applications [3]. However, data loss, interference and latency are the major threats in these net works. Being a public frequency network, wireless interface is extremely risky for official private information.

A cross-layer approach reduces the interference and latency in WSN's [4]. Adaptive modulation is used to improve the spectral efficiency in wireless systems [5, 6]. Security software is available in market, in which information can be protected through the use of

encryption, along with hop-to-hop security and end-to-end security [7].When there is continuous interference in several channels, the channel blacklisting will provide an efficient solution. In case of intermittent interference, the channel hopping is an appropriate solution [8].Limited bandwidth is a demerit of wireless systems. Data aggregation is a good method to achieve requisite network capacity within the limited bandwidth [9]. Coding is also applied in data transmission to increase network capacity [10, 11]. Furthermore, it is pointed out [12] that instead of transmitting the unrefined data, only the processed data are transmitted over the WSN's.

The following points are of utmost importance for the optimal management of the field instrumentation:

i) Remote access to all the parameters of the installed devices

ii) Remote calibration and test

iii) Automatic recording of all test results as well as storage of all the configuration data.

Wireless devices can make all these functionalities available in control room, similarly to what plant operators are used to get with wired smart devices.

End-user operators and maintenance personnel can benefit of many other applications that can be integrated with the wireless infrastructure, to name a few:

i) Radio-frequency identification (RFID) and personnel location in the plant

ii) Portable wireless detectors

iii) RFID for equipment tags to implement an advanced maintenance scheduler system

iv) Portable human machine interface (HMI)

v) Portable measurement devices

vi) Portable cameras or thermo cameras.

In addition to refining applications, wireless technology has been also recently proposed to replace cabling in land exploration application.

3. Wireless control model

Figure 1 shows the conventional wired and proposed wireless control loops for industry.

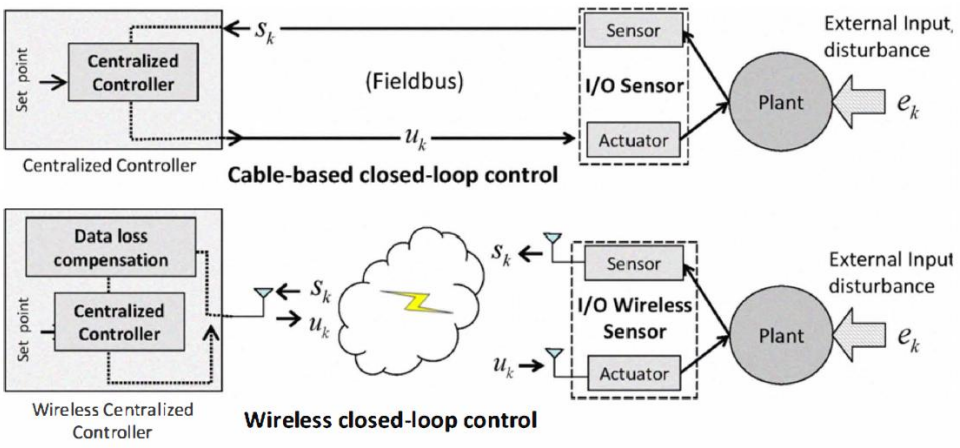

Fig. 1 Wired verses wireless control

In the proposed wireless control model, controller and the plant to be connected via a two-way digital communication channel of limited bandwidth. As depicted in Figure 1, sensors are monitoring the state of a process and occasionally forward the digital measurements (Sk) to a remote controller. Based on these measurements, the remote controller computes a control signal (Uk) and sends it to the actuator over the feedback channel. Upon recovering the control signal, the actuator applies a suitable action to adjust the plant state. Consistent communication occurs only if both measurement Sk and feedback control Uk are decoded within specified time limit defined by the controller.

A wireless sensor network (WSN) consists of spatially distributed autonomous sensors to monitor physical or environmental conditions and to transmit their data through the network to a main location. The more modern networks are bi-directional, and are also enabling control of sensor activity. The development of wireless sensor networks was motivated by military applications such as battlefield surveillance; today such networks are used in many industrial and consumer applications, such as industrial process monitoring and control, machine health monitoring, and so on.

3.1 Design of wireless control model

At the outset an automated physical model was formed which consisted of ICT, smart components and systems, sensor/actuator networks and control algorithms. Optimization of process control loop could be achieved by allowing data exchange between the automation system, the manufacturing execution system, and the enterprise resource planning system.

The quantity of data that is accessible in and around an ICT automation system contains a lot of information about the process or plant. Advanced quality monitoring systems that investigate the data, extract information about the state of production, and monitor the well-being of the plant, economizes the process industry.

Control valves are mainly used in process industries to control process variables such as flow, pressure, temperature, and liquid level [13]. For this, the output signal from sensor installed in the process is directed to a controller. Required value of the process variable can be set in the controller. Controller always compares the measured value and set value, and the variation is used to open the control valve fully or partially. The fully opening or closing of control valves is done by means of electrical, hydraulic or pneumatic control systems [14]; the control signals are 4-20mA signals for industry and 0-10V for "Smart" systems. Plenty of small open loop wireless control systems are available in industry. However, if we can control the process through a closed loop wireless control system, it will be highly advantageous. Successful implementation of ICT enabled wireless process control systems, enables controlling a process in India from places as far as other continents. Adoption of such a technology can be a shot in the arm for modern industry.

Model essentially consists of a sensor, installed in the process for sensing the instantaneous values of PV. This value of PV is send to a µC placed in the local station through a process variable transmitter. A µC is a small computer on a single integrated circuit containing a processor core, memory, and programmable input/output peripherals, which provides real time identification of the process [15]. µC's make it economical to digitally control processes. Serial input/output such as serial ports are available in µC's through which inputs and outputs can be transferred. PV transmitter output is a 4-20 MA current signal, but µC accepts only digital voltage signals. A current to voltage converter is used to convert this signal into corresponding voltage form and an analogue to digital converter (ADC), integrated in the µC, converts the signal into discrete form. An ADC can access eight inputs and produce eight outputs through a single port.

This signal is then processed and wirelessly transmitted to a computer placed in a far-off location. A transmitter receiver set is installed in the µC as well as in the remote computer for wireless transmission. Adaptive coded modulation schemes can be in corporate in the wireless networked control system to improve the energy efficiency and data rate over the communication channel [16].

The receiver of remote computer receives the signal transmitted. Required value of PV is set in the computer software. The remote computer always compares the instantaneous value with the required one and if there is any deviation between them a control action is send to the local station µC through the transmitter. A prerequisite for transmitting the digital signal output of µC to control valve of physical variable is the incorporation of a digital to analogue converter (DAC) in between µC and control valve [17]. Number of DAC's to be installed in the process is proportional to the number of physical variables to be measured. Inputs of the model are amenities provided to the ICT based wireless control system to get the optimum result and outputs will be the expected result of the proposed work.

4. Results and discussions

The implementation of this innovative system proved itself the right and opportune decision by being the catalyst that paved way to the following notable improvements:

In internet services, hacking of data is a major problem. However, in an ICT control system separate networks are used for a particular requirement of the process. Only a few personnel are aware of the password. Several software programs are available for the quick cracking of passwords that are dictionary words and common names. Individual user security can be improved by using a randomized, mixed character-number password instead of an English word or common name. Installation of encryption software in sensitive communication net works will also reduce hacking. Accessing of reliable security systems in communication networks enhances the reliability of process control systems. The entire process has been rendered it easier to control and monitor to a significant extent.

In short, ICT enabled wireless control consumes only a lesser space and not concerned about distance between control room and process. By introducing such a system, production can be increased and the system can prove highly beneficial to industries.

5. Conclusion

This paper outlines a brief description on a wireless control closed loop model for the process industry .Conventional methods used for controlling a physical variable in a process control system consists of a computer in the control room and instantaneous value of the physical variable is transmitted to the computer from then process location. According to the desired value of the physical variable, the computer can take control action. However, this is a wired system and is distance dependent. By replacing this system with ICT enabled wireless control

system, process can be controlled even from farther locations. Disadvantages of wired systems such as larger space consumption and the distance constraint can be overcome. Reliability and speed of response can be increased. With the introduction of a highly secure system, hacking can be reduced to a notable extent when compared to Internet based process control systems. In this model, only one physical variable is considered and is controlled by a local µC and remote computer with the help of sensor, physical variable transmitter, V – I convertor, ADC, DAC, wireless receivers and transmitters. As a future scope, several physical variables can be controlled by using the same system by incorporating the same number of DACs as physical variables. By incorporating more powerful wireless systems, a process in India can be controlled from other continents.

7. Reference

[1] Macii, D. ; Ageev, A. ; Somov, A, Power consumption reduction in Wireless Sensor Networks through optimal synchronization, Instrumentation and Measurement Technology Conference, 2009. I2MTC '09. IEEE, 5-7 May 2009 , PP:1346 – 1351, 2009

[2] Gang Zhao and Davis; Wireless Sensor Networks for Industrial Process Monitoring and Control: A Survey; Network Protocols and Algorithms, , Vol. 3, No. 1,pp 1-18. 2011

[3] Dhaval C. Bhatt, Tarulata Chauhan; A Survey on Wireless Sensor Network: An ApplicationPerspective, International Journal of Engineering Research & Technology, Vol.2 - Issue 11, 2013

[4] Behnam Dezfouli, MarjanRadi, ShukorAbdRazak,A Cross-Layer Approach For Minimizing Interference And Latency Of Medium Access In Wireless Sensor Networks, International Journal of Computer Networks & Communications), Vol.2, No.4, ,pp 126-142, , 2010

[5] M. S. Alouini and A. J. Goldsmith, "Adaptive modulation over Nakagami fading channels," Wireless Personal Communications, vol. 13, pp. 119-143, May 2000.

[6] Xiao Zhao, Elyes Bdira and Mohamed Ibnkahla: Joint Adaptive Modulation and Adaptive MAC Protocols for Wireless Sensor Networks. *International Journal of Computer Applications* 85(19):32-39, 2014.

[7] Xiang He, A Yener, End-to-End Secure Multi-Hop Communication with Un trusted Relays, IEEE Transactions on Wireless communications, Volume:12 Issue:1 ,pp:1-11, 2013

[8] http://searchsecurity.techtarget.com/definition/application-blacklisting, 2014

[9] M. Hanssmann, S. Rhee, and S. Liu, "No wiring constraints," *IEEE Industry Applications Magazine*, pp. 60-65. http://dx.doi.org/10.1109/MIAS.2009.932593 , August 2009.

[10] S. Katti, H. Rahul, W. Hu, D. Katabi, M. Medard and J. Crowcroft, "XORs in the Air: Practical wireless network coding," *IEEE/ACM Transactions on Networking*, vol. 16 , no. 3, pp. 497-510, 2008.

[11] Li.T, ‘ Applying TRIZ and AHP to develop innovative design for automated assembly systems’, International Journal of Advanced Manufacturing Technology, Volume 46, Issue 1-4, pp 301-313, 2010.
[12] B. Lu, T. G. Habetler, and R. G. Harley, “A novel motor energy monitoring scheme using wireless sensor networks,” IEEE Industry Applications Conference, 2006
[13] Claudio Garcia, Comparison of friction models applied to a control valve ,Control Engineering Practice, Volume 16, Issue 10, Pages 1231-124, 2008

[14] Michael Kuehnlein1, Matthias Liermann2, Julian Ewald1 and Hubertus Murrenhoff, Adjustable Flow-Control Valve For The Self-Energising Electrohydraulic Brake; International Journal of Fluid Power 13 No. 2,2012
[15] P.W. Prickett, M.R. Frankowiak,R.I. Grosvenor,Microcontroller-based process monitoring and management using embedded Petri-nets,Robotics and Computer-Integrated Manufacturing,volume 28, Issue 5, Pages 602–612, 2012.
[16] Li Yang, Xin-Ping Guan, Cheng-Nian Long, Xiao-Yuan Luo,Analysis and Design of Wireless Networked Control System Utilizing Adaptive Coded Modulation, ActaAutomaticaSinica, Volume 35, Issue 7, Pages 911–918, July 2009
[17] Douglas V. Hall, Microprocessors and Interfacing, Tata McGraw Hill

PROCESS CONTROL IN SIGNAL TRANSMISSION

S.Kalyani Sundaram, A.Anushya
UG scholars,Department of EIE,SNS College of Technology, Coimbatore-35
Email-id: klnsundaram78@gmail.com anushyaarumugam@gmail.com

ABSTRACT:

Process control is extensively used in industry and enables mass production of continuous processes. Process control enables automation, with which a small staff of operating personnel can operate a complex process from a central control room. Nowadays learning the basics of signal transmission is becoming a greater challenge than in previous decades. The challenge results from the recent, rapid change in technology for control signal transmission. From the inception of process control and till the 1990's, each signal involves the value a single variable is transmitted in only one direction by pneumatic, electronic, or hydraulic techniques. These techniques are termed as analog signals. This lack of two-way communication limits the capability of the system. Recently, new technology is used for the signal transmission using digital communication, which has much greater flexibility for transmitting multiple variable values, communicating to both directions and performing calculations. Two-way communication and computation at any element in the system provides the opportunity for diagnostic information to be communicated about the performance of the sensor and final element. Diagnostics can be used to schedule the maintenance. Since control equipment has a long lifetime, practicing engineers will face many examples of both analog and digital transmission technologies and they must have a basic understanding of both the technologies.

INTRODUCTION:

Process control is an engineering discipline that deals with architectures, mechanisms and algorithms for maintaining the output of a specific process within a desired range. For instance, the temperature of a chemical reactor may be controlled to maintain a consistent product output. The operations that are associated with process control have always existed in nature. Such "natural" process control can be defined as any operation that regulates some internal physical characteristic that is important to a living organism. Examples of natural regulation in humans include body temperature, blood pressure, and heart rate. Early humans found it necessary to regulate some of their external environmental parameters to maintain life. This regulation could be defined as "artificial process control" or more simply as "process control," as we will refer to it in this book. This type of process control is accomplished by observing a parameter, comparing it to some desired value, and initiating a control action to bring the parameter as close as possible to the desired value. One of the first examples of such control was early man's use of fire to maintain the temperature of his environment. The term automatic process control came into wide use when people learned to

adapt automatic regulatory procedures to manufacture products or pro-cess material more efficiently. Such procedures are called automatic because no human (manual) intervention is required to regulate them. All process systems consist of three main factors or terms the manipulated variables, disturbances, and the controlled variables .

SIGNAL PROCESSING:

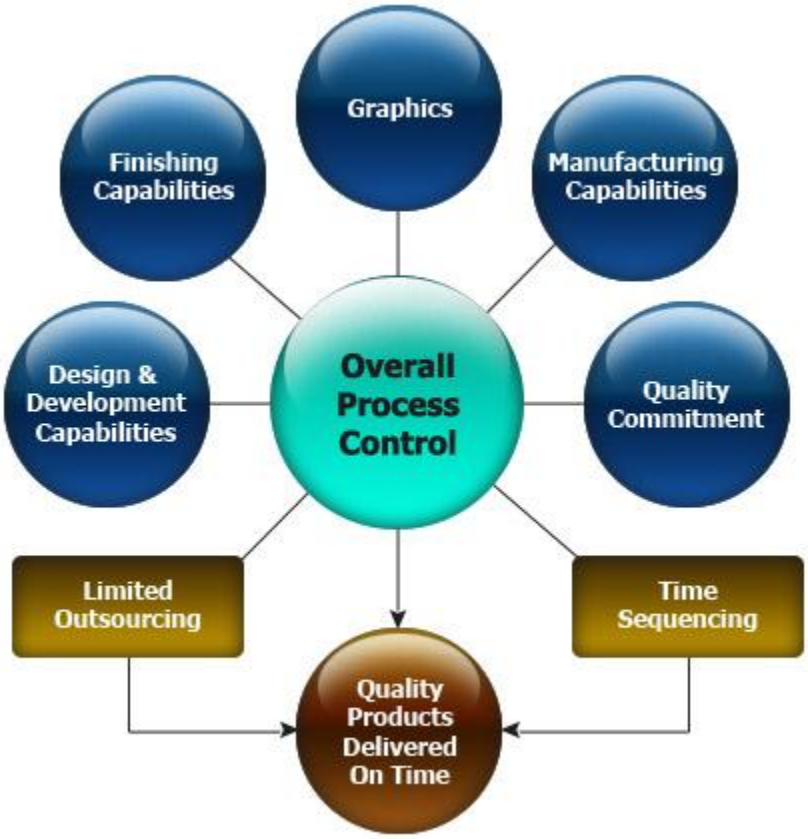

Signal processing is an area of Systems Engineering, Electrical Engineering and applied mathematics that deals with operations on or analysis of analog as well as digitized signals, representing time-varying or spatially varying physical quantities. Signals of interest can include sound, electromagnetic radiation, images, and sensor readings, for example biological measurements such as electrocardiograms, control system signals, telecommunication transmission signals, and many others.

Fields of signal processing

- Financial signal processing – analyzing financial data using signal processing techniques, especially for prediction purposes.

- Statistical signal processing – analyzing and extracting information from signals and noise based on their stochastic properties
- Spectral estimation – for determining the spectral content (i.e., the distribution of power over frequency) of a time series
- Audio signal processing – for electrical signals representing sound, such as speech or music
- Speech signal processing – for processing and interpreting spoken words
- Image processing – in digital cameras, computers and various imaging systems
- Video processing – for interpreting moving pictures
- Array processing – for processing signals from arrays of sensors
- Time-frequency analysis – for processing non-stationary signals
- Filtering – used in many fields to process signals
- Seismology
- Data mining – for analysis of large quantities of data to extract previously unknown interesting patterns

SIGNAL TRANSMISSION:

Signal transmission refers to the sending and receiving of data through given systems. It is usually done through electrical systems that are compatible. Signal transmission via nerves is one way of carrying out communication in the human body.

Mathematical methods applied in signal processing

- Linear time-invariant system theory, and transform theory
- System identification and classification
- Calculus
- Differential equations
- Vector spaces and Linear algebra
- Functional analysis
- Probability and stochastic processes
- Detection theory
- Estimation theory
- Optimization
- Programming

- Numerical methods
- Iterative methods
- Time series

SIGNAL TYPES:

In most exsisting plants pneumatic and electronic signals are predominant. Pneumatic signals are normally 3-15 pounds per square inch (psi), and electronic signals are normally 4-20 milliamps (mA). Optical signals are also used with fiber optic systems or when a direct line of sight exists. Radio and hydraulic signals are also used, though they are not as common because of inherent problems such as radio signal interference and leakage of hydraulic systems. However, radio signals commonly are used when sensors and transmitters are great distances (on pipelines, for example) from control centers.

A major difference between electronic and pneumatic transmission systems is the time required for signal transmission. In an electronic system there are no moving parts, only the state of the signal changes. This change occurs with virtually no time lost.

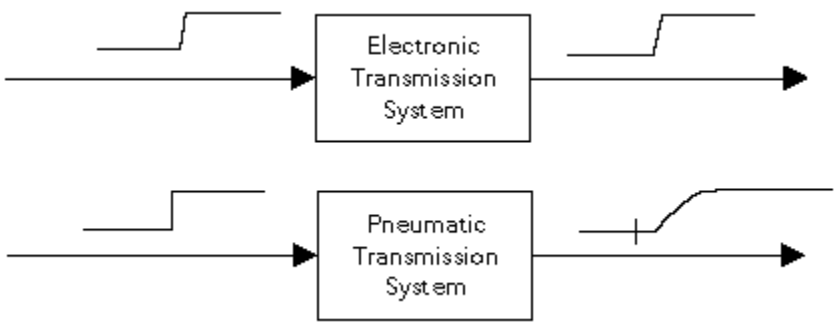

Signal Transmission for Electronic and Pneumatic Signals

As we stated previously, mechanical movement takes place whenever any pneumatic process signal changes. When devices move mechanically, time is lost. In addition, pneumatic systems, because they contain moving parts, are higher maintenance and subject to vibration, as well as rotational or gravitational mounting problems. However, pneumatic systems are still in place in many plants because they are safer than electrical systems in certain environments containing potentially explosive atmospheres.

CATEGARIES OF SIGNAL PROCESSING:

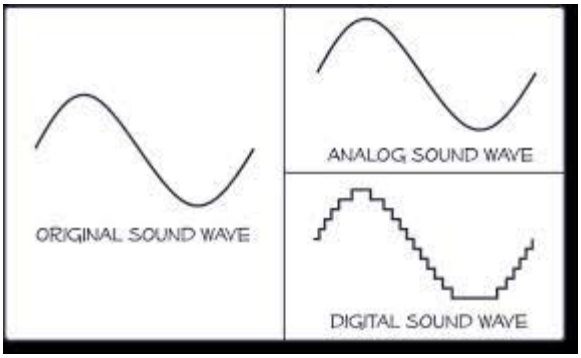

Analog signal processing

Analog signal processing is for signals that have not been digitized, as in legacy radio, telephone, radar, and television systems. This involves linear electronic circuits as well as non-linear ones. The former are, for instance, passive filters, active filters, additive mixers, integrators and delay lines. Non-linear circuits include compandors, multiplicators (frequency mixers and voltage-controlled amplifiers), voltage-controlled filters, voltage-controlled oscillators and phase-locked loops.

Discrete-time signal processing

Discrete-time signal processing is for sampled signals, defined only at discrete points in time, and as such are quantized in time, but not in magnitude.Analog discrete-time signal processing is a technology based on electronic devices such as sample and hold circuits, analog time-division multiplexers, analog delay lines and analog feedback shift registers. This technology was a predecessor of digital signal processing (see below), and is still used in advanced processing of gigahertz signals.The concept of discrete-time signal processing also refers to a theoretical discipline that establishes a mathematical basis for digital signal processing, without taking quantization error into consideration.

Digital signal processing

Digital signal processing is the processing of digitized discrete-time sampled signals. Processing is done by general-purpose computers or by digital circuits such as ASICs, field-programmable gate arrays or specialized digital signal processors (DSP chips). Typical arithmetical operations include fixed-point and floating-point, real-valued and complex-valued, multiplication and addition. Other typical operations supported by the hardware are

circular buffers and look-up tables. Examples of algorithms are the Fast Fourier transform (FFT), finite impulse response (FIR) filter, Infinite impulse response (IIR) filter, and adaptive filters such as the Wiener and Kalman filters.

Nonlinear signal processing

Nonlinear signal processing involves the analysis and processing of signals produced from nonlinear systems and can be in the time, frequency, or spatio-temporal domains. Nonlinear systems can produce highly complex behaviors including bifurcations, chaos, harmonics, and sub harmonics which cannot be produced or analyzed using linear methods.

ANALOG SIGNAL TYPES:

Most data acquisition signals can be described as analog, digital, or pulse. While analog signals typically vary smoothly and continuously over time, digital signals are present at discrete points in time . In most control applications, analog signals range continuously over a specified current or voltage range, such as 4-20 mA dc or 0 to 5 V dc. While digital signals are essentially on/off (the pump is on or off, the bottle is there or isn't), analog signals represent continuously variable entities such as temperatures, pressures, or flow rates. Because computer-based controllers and systems understand only discrete on/off information, conversion of analog signals to digital representations is necessary. Transduction is the process of changing energy from one form into another. Hence, a transducer is a device that converts physical energy into an electrical voltage or current signal for transmission. There are many different forms of analog electrical transducers. Common transducers include load cells for measuring strain via resistance, and thermocouples and resistance temperature detectors (RTDs) for measuring temperature via voltage and resistance measurement, respectively. Transmission channels may be wires or coaxial cables.

DIGITAL SIGNALS:

In electronic signal and information processing and transmission, digital technology is increasingly being used because, in various applications, digital signal transmission has many advantages over analog signal transmission. Numerous and very successful applications of digital technology include the continuously growing number of PCís, the communication network ISDN as well as the increasing use of digital control stations (Direct Digital Control: DDC).Unlike analog technology which uses continuous signals, digital technology encodes the information into discrete signal states. When only two states are assigned per digital signal, these signals are termed binary signals. One single binary digit is termed a bit ñ a contraction for binary digit

DIGITAL SIGNAL TRANSMISSION:

Industrial networks that transmit data using digital signals often are an integral part of a data acquisition or process control solution. A basic understanding of the network technologies that are available for various applications is required to make the best implementation decisions-decisions that can have a profound effect on the ability to adapt to ever-changing technologies. For example, the type of networks or network products selected for a data acquisition application can greatly affect cost/benefit evaluations for future projects. Until recently, fiber optics were an expensive option that seemed like overkill for most applications. But with the information load now likely to flow between nodes on an enterprise network, fiber looks attractive. Network technologies come in a bewildering array of options, and certain segments of this technology are changing at an incredible rate. The average user might spend weeks researching the various ways to build or improve a network, just to find that once a decision is made and products are purchased, the next wave of bigger, better, faster technology is now available. A well-designed, integrated solution to data

transmission will yield a competitive advantage to any industrial enterprise. Users in all aspects of a business should be able to obtain plant and business data from any physical node, local or remote. "Gluing" pieces of new and/or existing networks together is becoming more feasible with the use of bridging, routing, and media conversion technologies that link local area, wide area, and industrial networks together. And with Internet and wireless technologies, data transmission over large geographic areas is increasingly feasible.

ANALOG SIGNAL TRANSMISSION:

Analog (or analogue) transmission is a transmission method of conveying voice, data, image, signal or video information using a continuous signal which varies in amplitude, phase, or some other property in proportion to that of a variable. It could be the transfer of an analog source signal, using an analog modulation method such as frequency modulation (FM) or amplitude modulation (AM), or no modulation at all. Most analog transmissions fall into one of several categories. Until recently, most telephony and voice communication was primarily analog in nature, as was most television and radio transmission. Early telecommunication devices utilized analog-to-digital conversion devices called modulator/demodulators, or modems, to convert analog data to digital data and back. The analog transmission is still very popular, in particular for shorter distances, due to significantly lower costs and complex multiplexing and timing equipment is unnecessary, and in small "short-haul" systems that simply do not need multiplexed digital transmission.

However, in situations where a signal often has high signal-to-noise ratio and cannot achieve source linearity, or in long distance, high output systems, analog is unattractive due to attenuation problems. Furthermore, as digital techniques continue to be refined, analog systems are increasingly becoming legacy equipment.Recently, some nations, such as the Netherlands, have completely ceased analog transmissions on certain media, such as television, for the purposes of the government saving money.

DIGITAL VS ANALOG:

Digital signals are now replacing analog for television transmission worldwide. Digital signals use a stream of digital data (2 differing signal levels to carry binary data) instead of a continuously variable signal level. The biggest difference is that digital data is more resistance to corruption than its analog equivalent. It is this characteristic that means we see a

clean signal rather than one with noise in the image as is the case with a poor analog signal. Digital signals can also be compacted using a technique called data compression. Compression allows signals to take far less bandwidth than they would otherwise need and so more channels can be carried in a given bandwidth. This compression allows HD signals to be broadcast. Broadcasting of HD analog signals would prove challenging. It is important to understand that digital does in itself not mean higher resolution. Digital SD signals are exactly the same resolution as their analog equivalent. The comparison cannot be made with HD as HD transmission is always digital. Digital transmission also allows a variety of additional data to be carried within the same signal. Surround sound is one of the more common benefits of auxiliary data. Signal transmission technology can be an important aspect of flow measurement system design, and improper technology selection can potentially introduce significant error and process control problems.

Analog signal transmission utilizes a continuous signal, such as four to 20 milliamps or zero to 1,000 Hertz, to represent zero to 100 percent of full scale although some transmitters will produce a signal slightly in excess of full scale. The maximum signal is limited to the transmitter full scale, so the transmitter full scale is typically selected to ensure the maximum measurement perhaps under extreme conditions does not exceed the full scale represented by 20 milliamps or 1,000 Hertz. As a result, the transmitter tends to operate relatively low in its operating range where its accuracy is typically degraded. In addition, totalizing continuous signals, such as four to 20 milliamps, usually requires a signal conversion that further degrades accuracy. Process measurements in excess of the full scale will measure as if the process measurement were at full scale, so flowrates above full scale flow will totalize less than the actual flow. Further, process control system would operate as if the flow were at full scale even though the actual flow could be two or three times higher. This inaccurate information could cause an unsafe or abnormal process condition.

It should be noted that some transmitters are capable of producing signals above full scale (typically approximately 10 percent) to mitigate some of these issues. On the other hand, digital signal transmission utilizes a digital number to represent the measurement. In doing so, the transmitter can often be calibrated at a lower full scale, which is more representative of its typical operation. Calibrating at a lower full scale can result in a measurement that is more accurate. Occasional measurements above full scale are not limited

to a maximum signal, such as 20 milliamps or 1,000 Hertz, so the process measurement will be transmitted with reasonable accuracy. In addition, the process control system (and operator) will have better information with which to make decisions.

CONCLUSION:

In telecommunications, transmission is the process of sending and propagating an analogue or digital information signal over a physical point-to-point or point-to-multipoint transmission medium, either wired, optical fiber or wireless. Transmission technologies and schemes typically refer to physical layer protocol duties such as modulation, demodulation, line coding, equalization, error control, bit synchronization and multiplexing, but the term may also involve higher-layer protocol duties, for example, digitizing an analog message signal, and source coding (compression).Transmission of a digital message, or of a digitized analog signal, is known as data transmission or digital communication. One transmission is the sending of a signal with limited duration, for example a block or packet of data, a phone call, or an email.

REFERENCE:

1.'Telecommunications Technology Fundamentals". http://www.informit.com. 28 December 2001.

2.'Telecommunications Media". http://www.britannica.com. 21 January 2014.

3.The Froehlich/Kent Encyclopedia of Telecommunications By Allen. Kent, Froehlich E. Froehlich.1991 Marcel Dekker. ISBN 0-8247-2900-5

4.Telecommunication System Engineering By Roger L. Freeman.2004 John Wiley and Sons. ISBN 0-471-45133-9

5.Netherlands Ends Analog Transmission - Goodbye antenna, hello digital... - dslreports.com

6.http://www.nytimes.com/aponline/technology/AP-Netherlands-TV.html?_r=2&oref=slogin&oref=slogin

7.A. P. Clark , "Principles of Digital Data Transmission", Published by Wiley, 1983

8.David R. Smith, "Digital Transmission Systems", Kluwer International Publishers, 2003, ISBN 1-4020-7587-1. See table-of-contents.

9.Sergio Benedetto, Ezio Biglieri, "Principles of Digital Transmission: With Wireless Applications", Springer 2008, ISBN 0-306-45753-9, ISBN 978-0-306-45753-1. See table-of-contents

10.Simon Haykin, "Digital Communications", John Wiley & Sons, 1988. ISBN 978-0-471-62947-4. See table-of-contents.

11.John Proakis, "Digital Communications", 4th edition, McGraw-Hill, 2000. ISBN 0-07-232111-3. See table-of-contents.

CFD Modeling And Simulation Of Oil/ Water Separation In A Novel Hydro Cyclone Using Fluent Software

Jinish K[#], Manilal A M[*], Dr. P.A.Soloman[$]

[#]*Mtech process control, Dept. of chemical engineering ,Govt. Engineering college Thrissur, Calicut university, Kerala, India*

[*]*Assistant Professor, Dept. of chemical engineering ,Govt. Engineering college Thrissur , Calicut university, Kerala, India*

[$] *Associate Professor, Dept. of chemical engineering ,Govt. Engineering college Thrissur , Calicut university, Kerala, India*

[#]jinish21@gmail.com

[*]manilalam@gectcr.ac.in

[$]pasolomon@gmail.com

Abstract

An oil water separator (OWS) is a piece of shipboard or in general waste water treatment equipment that separates oil from oily waste water such as bilge water before the waste water is discharged. Bilge water is an almost unavoidable product in ship operations. Bilge water that is generated in proximity to shipboard equipment (such as in the engine room) often contains oil and its direct discharge would result in undesirable transfer of waste oil to the marine environment. One of the most economic method used for the separation of oil from waste water is by using a hydro cyclone. The objective of this work is to develop a mathematical model of the flow behavior in cyclone and with the help of a Computational Fluid Dynamics (CFD) software quantify the performance under suitable conditions. CFD is a mathematical tool capable of simulating a wide range of fluid flows. Integrated CFD software has been applied to study the flows in oilfield separators. Because of high inlet velocity to hydro cyclone a highly turbulent flow pattern is expected within the hydro cyclone. Since the velocity varies in all the three directions a 3D CFD model for the cyclone is constructed using GAMBIT software and export to FLUENT 6.3. The feed to Cyclone is defined as a mixture of water and benzene liquid. A mass flow inlet boundary condition is used for flow inlet and pressure outlet is used at the hydro cyclone outlet. In order to capture the turbulence, k-ϵ RNG turbulence model is used. Proper operating conditions such as gravity, pressure, mixture mass fractions etc. are specified. The numerical results obtained are validated with the results of Reference paper [1]. The analysis of results shows that marked separation is achieved. The plots of density along Y-Z Surface shows that a clear separation between low density (oil) and high density (water) components.

Key words: CFD, density, turbulence model

1. Introduction

An oil water separator (OWS) is a piece of shipboard or in general waste water treatment equipment that separates oil from oily waste water such as bilge water before the waste water is discharged. Bilge water is an almost unavoidable product in ship operations. Bilge water that is generated in proximity to shipboard equipment (such as in the engine room) often contains oil and its direct discharge would result in undesirable transfer of waste oil to the marine environment. There are different technologies that can be used to separate oil from waste water. Most economic are those based on the gravity effect, where oil droplets are separated from the water by floating to the surface due to the difference in density between oil and water. Computational fluid dynamics is a very complex and challenging subject. It operates on the basis of fundamental concepts such as laws of conservation, momentum, energy, and thermodynamics. The partial differential equations known as Navier- Stokes equations ensuing from these laws governs the fluid dynamics. Solving the Navier-Stokes equations involves the use of sophisticated solution algorithms. These work by processing initial fluid flow conditions which form the basis for the prediction of the next flow conditions. CFD is more suited to steady state flow which is less demanding for the computer and enables solution to be achieved within a reasonable number of iterations. This branch of fluid dynamics called computational fluid dynamics complements experimental and theoretical fluid dynamics by providing an alternative cost-effective means of simulating real flows. As such it offers a means of testing theoretical advances for conditions unavailable experimentally [4].

Moreover, there are several unique advantages of CFD over experimental–based approaches to fluid systems design:

- Optimization by such techniques can enhance performance;
- can simulate flow conditions not reproducible in experimental model tests;
- provides more detailed and comprehensive information and better visualization for detailed insight and better understanding of the designs and processes;
- reduce concept-to-prototype time;
- produce large savings in equipment and energy costs which leads to revenue increases[3] .

2. Numerical Model

Computational Fluid Dynamics (CFD) solves the Navier- Stokes equations for the flow geometry on a discretised domain of the geometry of interest with the appropriate flow boundary conditions supplied. The Navier-Stokes equations are a complex nonlinear set of partial differential equations that describe the mass and momentum conservation of a fluid. In this study, the Navier-Stokes equations for two phases are used via the finite volume method (FVM) in FLUENT.

A CFD analysis consists of the following steps [6]:

- Problem identification and Pre-Processing
- Solver Extraction
- Post-Processing

A .Geometry creation using Gambit 2.3.16

The dimension of hydrocyclone used in this project is shown in figure. Two outlets are positioned at the bottom and top of the separator to separate water and oil respectively.

For complex geometries, quad/ hex meshes show no numerical advantage, and meshing effort can be saved by using a Tri/ Tetrahedral mesh [7]. Since the separator has a complex geometry, a Tri/ Tetrahedral mesh was used with an interval size of 0.01 m. Fig 1 indicates the geometry of designed hydro cyclone.

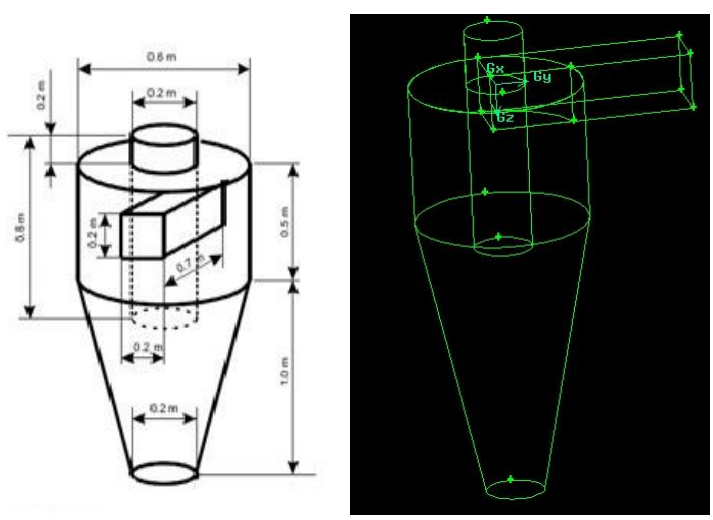

Fig 1: Geometry of hydrocyclone

B. Grid generation

The separator that was developed was then meshed using Tri/ Tetrahedral mesh with an interval size of 0.01 m (see fig. 2). The number of cells generated was 18078.

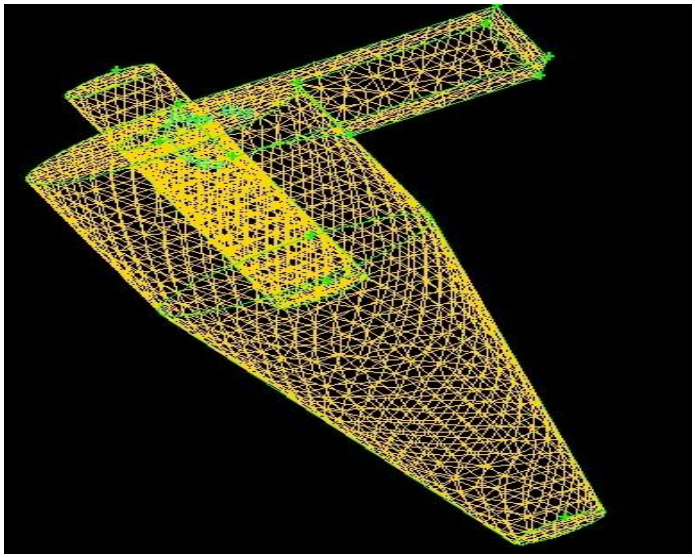

Fig 2: tetrahedral mesh in hydrocyclone

C. Governing equations

The modeling involves computation of velocity components in three dimensions and species mass fraction of each components in Y-Z plane .In this study, a Cylindrical coordinate system was used throughout. The computation of the fore mentioned parameters for each phase was performed using higher order discretization to avoid numerical diffusion. Gravity was enabled since a separator depends upon gravity to separate oil and water.

In Fluent an k-ϵ RNG turbulence model was chosen for the mixture flow based on the assumption made that the pattern of fluid flow is a homogenous and turbulent. To effectively model the separator, the following assumptions are prescribed in the numerical computation:

•Incompressible flow;

• Steady state;

• Turbulent flow;

• No heat transfer;

• No heat radiation.

The renormalization group (RNG) k-ϵ model is similar in form to the standard k-ϵ model but includes an additional an additional terms for dissipation rate ϵ development that significantly improve the accuracy, especially for rapidly strained flows. The effect of swirl on turbulence is included in the

RNG model, enhancing accuracy for swirling flows. The RNG k-$\in$ model has a similar form to the standard k-$\in$ model is a semi empirical model based on model transport equations for the turbulent kinetic energy (k) and its dissipation rate ($\in$), and are given by

Storage of k +convective transport of k = diffusive transport of k +rate of production of k + rate of destruction of k

$$\frac{\partial y}{\partial t}(\rho k)+\frac{\partial y}{\partial x_i}(\rho k u_i)=\frac{\partial y}{\partial x_j}\left[\left(\mu+\frac{\mu_t}{\sigma_k}\right)\frac{\partial k}{\partial x_j}\right]+p_k+D_k \ldots\ldots\ldots\ldots\ldots (1)$$

The production and destruction terms are suitably formulated.

Storage of $\in$ +convective transport of $\in$ = diffusive transport of $\in$ +rate of production of $\in$ + rate of destruction of $\in$

$$\frac{\partial y}{\partial t}(\rho \in)+\frac{\partial y}{\partial x_i}(\rho \in u_i)=\frac{\partial y}{\partial x_j}\left[\left(\mu+\frac{\mu_t}{\sigma_\in}\right)\frac{\partial \in}{\partial x_j}\right]+p_\in+D_\in \ldots\ldots\ldots\ldots\ldots\ldots (2)$$

The production and destruction terms are suitably formulated [2]

D. Boundary conditions

Once the mesh was generated, boundaries of computational domain were specified. Boundary type specifications define the physical and operational characteristics of the model at those topological entities that represent model boundaries. All wall conditions were assumed to be no slip boundary [3]. At the inlet, mass flow rate and pressure for mixture prescribed. The summary of the boundary specifications are presented below:

Inlet ……Mass flow inlet

Outlet oil ……Pressure outlet

Outlet water…….Pressure outlet

Wall……Wall

E. Solution algorithm

The control volume approach as implemented in the commercial CFD solver, FLUENT [7] was used in this study. In this method, the governing equations are first integrated on the individual control volumes that were created in the grid generation phase, to construct algebraic equations for the discrete dependent variables such as velocities, pressure, temperature, and conserved scalars. Secondly, the discretized equations are linearised and the resulting linear equation system is solved to yield updated values of the dependent variables. In this study, the segregated

solution method of FLUENT is used, as it is suitable for incompressible flows [6]. In this approach, the governing equations are solved sequentially (i.e., segregated from one another). Because the governing equations are non-linear (and coupled), several iterations of the solution loop must be performed before a converged solution is obtained. An IMPLICIT formulation scheme was used based on the fact that it is suitable for general purpose CFD computations on the grounds of its superior stability. A PRESTO pressure scheme was chosen for the pressure interpolation as it is well suited for steep pressure gradients involved in swirling flows, even though it takes longer time for convergence [1].

Second order upwind differencing discretization scheme was chosen for momentum, turbulence kinetic energy and turbulence dissipation rate, water in this study. The $k-\varepsilon$ RNG turbulence model was used for modeling turbulence based on the fact that it is the simplest turbulence model for which only initial and/or boundary conditions need to be supplied [3]. It also provides excellent performance for many industrially relevant flows. The SIMPLE algorithm was used for pressure-velocity coupling in this project. It was selected based on the fact that it is relatively straight forward and has been successfully implemented in numerous CFD procedures. The final converged solution was obtained by using an adequate number of iterations.

3.Results And Discussion

This section will aim to analyze the contours of density, species mass fraction of oil and water.

A. Density

Mixture containing fraction of water, oil are 0.8,0.2 respectively are given as inlet with mass flow rate .2772 kg/s and 2atm pressure. Density of inlet water and benzene liquid are 998.2 kg/m^3, 875 kg/m^3 respectively. Fig 3 represents the contours of density for y-z plane. As we expect a marked density separation is achieved . Low density at the top outlet indicates the presence of oil. High density at water outlet indicates the presence of water .

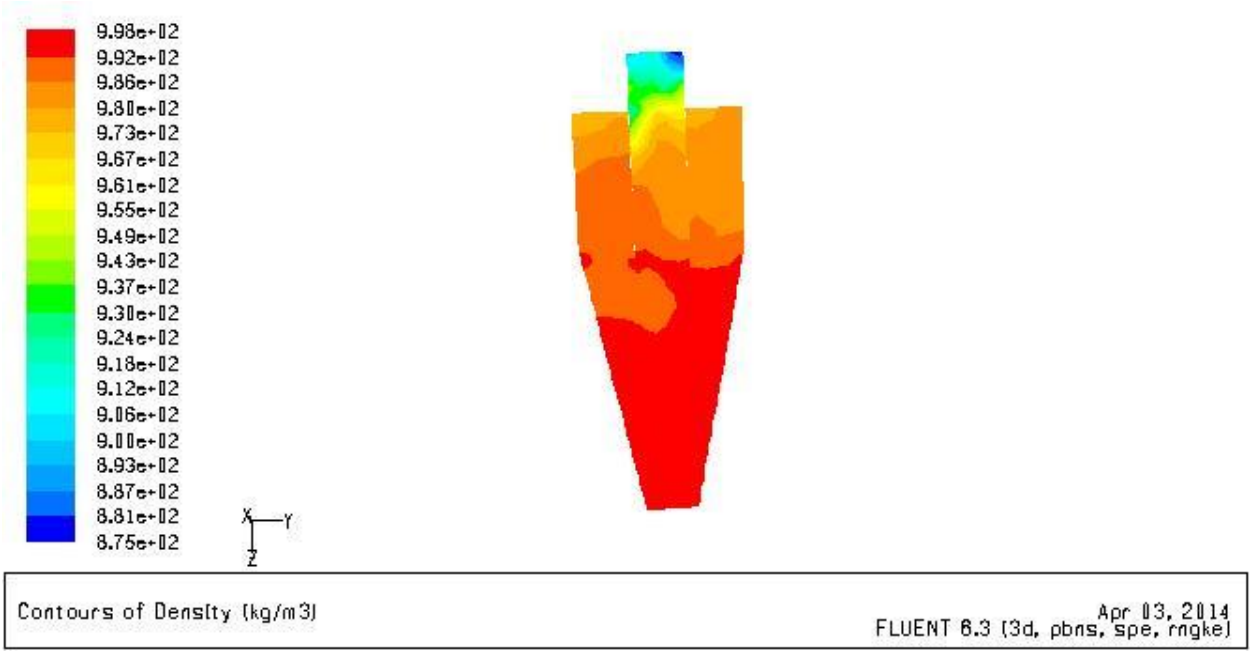

Fig 3: contours of density

B. Species mass fraction

Mass fraction of components (oil, water) is depicted in figure below. Efficiency of oil water separator can easily understand by this contours. Table 1 indicates the numerical value of mass weighted average mass fraction at inlet and outlets. Table indicates the mass weighted average mass fraction at water outlet is obtained as one.

Table 1: mass weighted average mass fraction versus inlet/outlets

Mass weighted average mass fraction	**Mixture inlet**	**Water outlet**	**Oil outlet**
Water	0.79986227	0.99043214	0.26298997
Oil	0.20013776	0.009567868	0.73701006

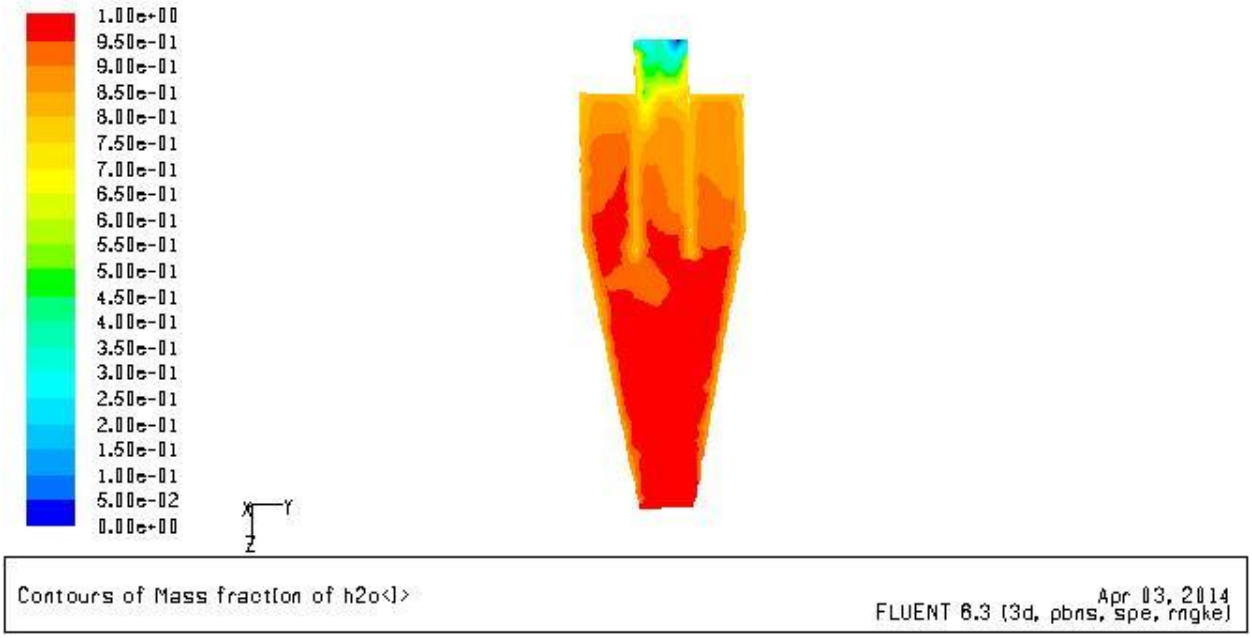

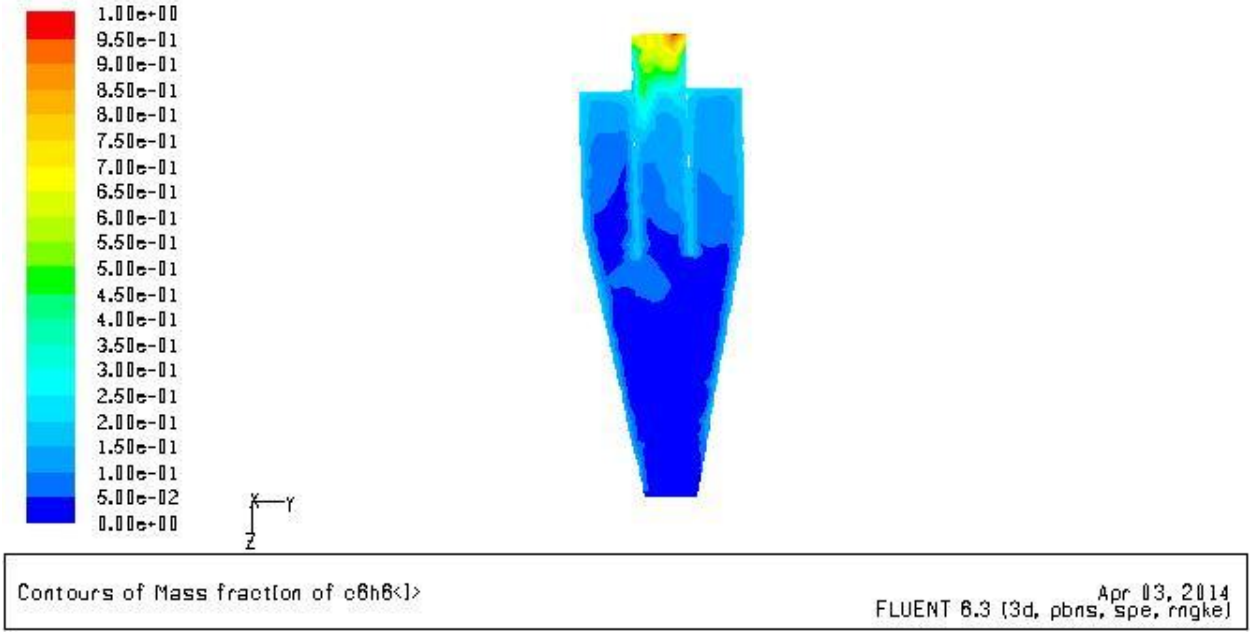

Fig 4: contours of mass fraction

4. Conclusion And Suggestions For Future Work

In this paper, numerical simulation research is carried out for novel oil/water separator for hydrocyclone with CFD. k-ϵ RNG turbulence model for a multiphase flow as implemented in the commercial software FLUENT 6.3.26 was used to solve the governing equations, while GAMBIT 2.3.16 was used for generating the separator geometry. Based on deep understanding of the model and structure of cyclone -plots of density variation, species mass fraction of components in mixture are studied under variety of circumstances. The plots of density along Y-Z plane shows that a clear separation between low density (oil) and high density (water) components.

Mass fraction of water at the water outlet is obtained as one. This indicates oil content in the water outlet is zero and this equipment that separates oil from oily waste water such as bilge water before the waste water is discharged.

In consequence, CFD techniques can prove useful in understanding important flow mechanisms in the separator and thus predict its performance. Furthermore, this study demonstrated the challenging task of modeling oil and water separator, and that more work has to be done to make the work more complete. This is in positive agreement with the works of [1].

NOMENCLATURE

Lattin letters

k Kinetic energy of turbulence $[m^2/s^2]$

t Time $[s]$

u Velocity $[m/s]$

D Diffusion coefficient $[m^2/s]$

Greek letters

μ Dynamic viscosity $[kg/m.s]$

ρ Material density $[kg/m^3]$

σ Surface tension $[N/m]$

ε Rate of viscous dissipation $[m^2/s]$

Subscripts

i, j Space directions

k phase index

Other symbols and operators

$\bar{u}$ Average of u

$\frac{\partial}{\partial t}$ Partial derivative

$\frac{D}{DT}$ Total derivative

x Spatial co-ordinate

Reference

1. M. Abdulkadir and V.Hernandez-perez " The effect of mixture velocity and droplet diameter on oil-water separator using computational fluid dynamics (CFD) " *world academy of science, Engineering and Technology 61 2010*.
2. K. Udaya Bhasker, Y. Rama Murthy , M.Ravi Raju , Sumit Tiwari , N. ramakrishnan "CFD simulation and experimental validation studies on hydrocyclone " *ScienceDirect mineral engineering 20(2007) 60-71*.
3. Versteeg, H.K. and Malalasekera, W., 2007. An Introduction to Computational Fluid Dynamics: the Finite Volume Method. 2nd ed. Pearson Educational Limited.
4. Fletcher, C.A.J., 1991. Computational techniques for fluid dynamics, vol.1. 2nd ed. Berlin:Spinger
5. Fakhru'l-Razi Ahmadun, Alireza Pendashteh, Luqman Chuah Abdullah Dayang Radiah Awang Biak, Sayed Siavash Madaeni, Zurina Zainal Abidin, Review of technologies for oil and gas produced water treatment Science Direct Journal of Hazardous Materials 170 (2009) 530–551.
6. FLUENT INC., 2003. Fluent 6 introductory training notes. Available from : http: www.fluent.com.
7. FLUENT INC., 2001. Gambit version 2 manuals, Centerra Resource park,10 cavendish Court, Lebanon, New Hampshire, USA. Available from : http: www.fluent.com
8. M.F.Dlamini, M.S.Powel and C J Meyer *A CFD* simulation of a single phase hydrocyclone flow field *The Journal of The South African Institute of Mining and Metallurgy volume 105 november 2005*.

Starting process of a furnace in a caustic soda plant using PLC

S.INDU
UG Scholar
Department of EIE
SNS College Of Technology
Coimbatore
Email id: indusakthivel94@gmail.com ,

S.C.THISANTH
UG Scholar
Department of EIE
SNS College Of Technology
Coimbatore
Email id: thisa.thisanth@gmail.com

M.BRINDHA M.E.,
Assistant Professor, Department of EIE, SNS College Of Technology, Coimbatore
Email id: mbrindhaeie@gmail.com

ABSTRACT

In caustic soda plant, caustic soda powder can be heated with the high temperature of 700-800 ℃.Then the high temperature caustic soda powder is mixed with 70% purity of hydrochloric acid. By this process, with the difference of temperature, caustic soda lye can be produced. The caustic soda powder can be heated by using furnace. In this paper, we will deeply discuss about the starting process of furnace with the help of Liquefied Petroleum Gas (LPG), furnace oil with steam, hydrogen gas, PLC (Programmable Logic Controller) and timers. At present this process is controlled using microcontroller which has some drawbacks. In microcontrollers interlocks cannot be provided and if any problem occurs the whole plant has to shut down and the controller should be replaced. But in PLC we can give interlocks and closed loop circuit. PLC reduces man power and automatic plant tripping is possible in case of any default problems in the plant. Control action in PLC is done with the help of ladder logic diagram. The Hydrogen gas is used which prevents pollution and also it is a renewable form of energy which can even be produced from salt which is very cheap when compared to coal obtained only by mining. The disadvantage of using hydrogen gas is the leakage which produces firing and destruction of the plant. This can be overcome by using gas detective sensors. It finds application in industries and plants wherever boiler is used to produce super-heated high pressure steam.

INTRODUCTION

A Programmable Logic Controller, or PLC, is more or less a small computer with a built-in operating system (OS). This OS is highly specialized to handle incoming events in real time, i.e. at the time of their occurrence. The PLC has input lines where sensors are connected to notify upon events (e.g. temperature above/below a certain level, liquid level reached, etc.), and output lines to signal any reaction to the incoming events (e.g. start an engine, open/close a valve, etc.). The system is user programmable. It uses a language called "Relay Ladder" or RLL (Relay Ladder Logic). The name of this language implies that the control logic of the earlier days, which was built from relays, is being simulated.

BLOCK DIAGRAM

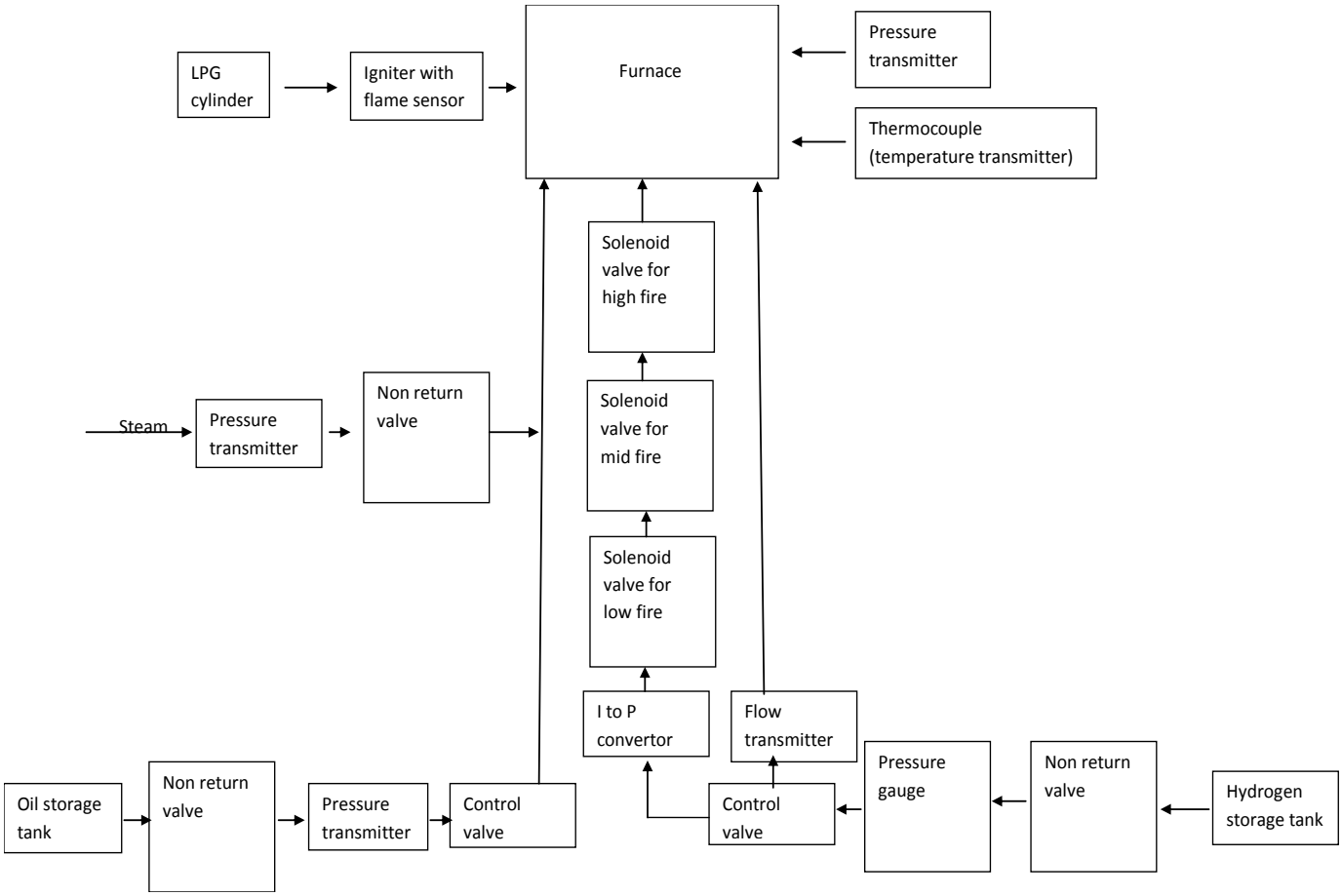

METHODOLOGY:

The process starts initially with the ignition of LPG gas in the furnace using an igniter. A flame sensor is used to detect the flame produced during the ignition of LPG gas. In order to control pressure and temperature in the furnace, pressure transmitter and temperature transmitter (thermo couple) are coupled with the furnace. Oil with steam is sent into the furnace for further ignition. Through pressure transmitter and a control valve required amount of oil is sent into the furnace. Both oil and stem paths are provided with a non – return valve to facilitate only one directional flow. While the process is carried on, on the other stream, hydrogen gas is sent into the furnace using a control valve and a flow transmitter. Using solenoid valves high, mid and low fire are fed into the furnace with the help of a current to pressure (I to P) converter. All the above steps lead to the starting process of the furnace. At present this process is controlled by a microcontroller. In this project we would like to carry out the controlling process using PLC (Programmable Logic Controller).

DISADVANTAGES OF MICROCONTROLLER

The software-development in hardware of an Embedded PC is much more expensive. The power consumption of an embedded PC is usually higher microcontroller systems also need an area of non-volatile memory to be set aside for storing , memories, or that previously used software to emulate the effect of having the two types of memory.

PROGRAMMABLE LOGIC CONTROLLER (PLC)

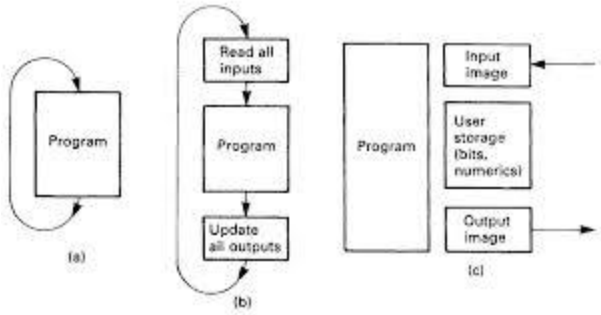

THE PLC'S PURPOSE IN LIFE

The PLC is primarily used to control machinery. A program is written for the PLC which turns on and off outputs based on input conditions and the internal program. In this aspect, a PLC is similar to a computer. However, a PLC is designed to be programmed once, and run repeatedly as needed. In fact, a crafty programmer could use a PLC to control not only simple devices such as a garage door opener, but their whole house, including switching lights on and off at certain times, monitoring a custom built security system, etc. Most commonly, a PLC is found inside of a machine in an industrial environment. A PLC can run an automatic machine for years with little human intervention. They are designed to withstand most harsh environments.

HISTORY OF PLC

When the first electronic machine controls were designed, they used relays to control the machine logic (i.e. press "Start" to start the machine and press "Stop" to stop the machine). A basic machine might need a wall covered in relays to control all of its functions. There are a few limitations to this type of control.

- Relays fail.
- The delay when the relay turns on/off.
- There is an entire wall of relays to design/wire/troubleshoot.

A PLC overcomes these limitations, it is a machine controlled operation.

RECENT DEVELOPMENTS

PLCs are becoming more and more intelligent. In recent years PLCs have been integrated into electrical communications (Computer |networks) i.e., all the PLCs in an industrial environment have been plugged into a network which is usually hierarchically organized. The PLCs are then supervised by a control centre. There exist many proprietary types of networks. One type which is widely known is SCADA (Supervisory Control and Data Acquisition).

BASIC OPERATION

The PLC is a purpose-built machine control computer designed to read digital and analog inputs from various sensors, execute a user defined logic program, and write the resulting digital and analog output values to various output elements like hydraulic and pneumatic actuators, indication lamps, solenoid coils, etc.

Scan cycle

Exact details vary between manufacturers, but most PLCs follow a 'scan-cycle'format.

Overhead

Overhead includes testing I/O module integrity, verifying the user program logic hasn't changed, that the computer itself hasn't locked up (via a watchdog timer), and any necessary communications. Communications may include traffic over the PLC programmer port, remote I/O racks, and other external devices such as HMIs (Human Machine Interfaces).

Input scan

A 'snapshot' of the digital and analog values present at the input cards is saved to an input memory table.

Logic execution

The user program is scanned element by element, then rung by rung until the end of the program, and resulting values written to an output memory table.

Output scan

Values from the resulting output memory table are written to the output modules. Once the output scan is complete the process repeats itself until the PLC is powered down. The time it takes to complete a scan cycle is, appropriately enough, the "scan cycle time", and ranges from hundreds of milliseconds (on older PLCs, and/or PLCs with very complex programs) to only a few milliseconds on newer PLCs, and/or PLCs executing short, simple code.

BASIC INSTRUCTION

Be aware that specific nomenclature and operational details vary widely between PLC manufacturers, and often implementation details evolve from generation to generation. Often the hardest part, especially for an inexperienced PLC programmer, is practicing the mental ju-jitsu necessary to keep the nomenclature straight from manufacturer to manufacturer.

Positive Logic (most PLCs follow this convention)

True = logic 1 = input energized

False = logic 0 = input NOT energized

Negative Logic

True = logic 0 = input NOT energized

False = logic 1 = input energized

Normally Open

(XIC) - eXamine If Closed

This instruction is true (logic 1) when the hardware input (or internal relay equivalent) is energized.

Normally Closed

(XIO) - eXamine If Open

This instruction is true (logic 1) when the hardware input (or internal relay equivalent) is NOT energized.

Output Enable

(OTE) - OuTput Enable

This instruction mimics the action of a conventional relay coil.

On Timer

(TON) - Timer ON

Generally, ON timers begin timing when the input (enable) line goes true, and reset if the enable line goes false before setpoint has been reached. If enabled until set point is reached then the timer output goes true, and stays true until the input (enable) line goes false.

Off Timer

(TOF) - Timer OFF

Generally, OFF timers begin timing on a true-to-false transition, and continue timing as long as the preceding logic remains false. When the accumulated time equals setpoint the TOF output goes on, and stays on until the rung goes true.

Retentive Timer

(RTO) - Retentive Timer On.

This type of timer does NOT reset the accumulated time when the input condition goes false. Rather, it keeps the last accumulated time in memory, and (if/when the input goes true again) continues timing from that point. In the Allen-Bradley construction, this instruction goes true once setpoint (preset) time has been reached, and stays true until a RES (RESet) instruction is made true to clear it.

Latching Relays

(OTL) - OuTput Latch.

(OTU) - OuTput Unlatch.

Generally, the unlatch operator takes precedence. That is, if the unlatch instruction is true then the relay output is false even though the latch instruction may also be true. In Allen-Bradley ladder logic, latch and unlatch relays are separate operators. However, other ladder dialects opt for a single operator modeled after RS (Reset-Set) flip-flop IC chip logic.

Jump to Subroutine

(JSR) - Jump to SubRoutine

For jumping from one rung to another the JSR (Jump to Subroutine) command is used.

SUPER HEATED STEAM

Steam is the technical term for water vapour, the gaseous phase of water, which is formed when water boils. If heated above the boiling temperature it becomes superheated steam. At atmospheric pressure water becomes steam at a temperature of 212 Deg. F. Steam becomes superheated if heated to a temperature above 212 Deg F. If the steam is not superheated, it starts to condense as soon as it hits the cooler atmospheric air, and if they do not want to deal with the water condensate many places will superheat their steam so they can keep excessive liquid forming upon or within their product when steam cleaning is applied. The higher temperature and pressure steam contains a great deal higher heat and pressure energy which precluded the formation of condensate in the steam transmission lines to the equipment.

LPG PROPERTIES

- LPG is a liquid under pressure but a gas at ambient conditions.
- Vapour LPG is twice as heavy as Air.
- Liquid LPG is half as heavy as water.
- LPG is colorless.
- LPG has a low boiling point of -18oC.
- LPG has a narrow flammability range between 1.8 to 9.5% in air.
- Flash point of LPG is -76oF.

- The approximate minimum ignition temperature of LPG is in the range 410oC to 580oC. LPG is odourless.
- Ethyl Mercaptan is added as an odourant to detect LPG in case of leaks.
- LPG is non-toxic.
- It is lightly anaesthetic and can cause suffocation, if present in sufficiently high concentrations.
- Liquid LPG can cause severe cold burns to the skin owing to rapid vapourisation and the consequent lowering of temperature

LPG ADVANTAGES

- Clean Burning
- No soot, burners have a longer life - so maintenance is low
- No spillage as it vaporises at atmospheric temperature and pressure.
- Effects of corrosion are greatly reduced
- Instantly controllable flame temperature
- Avoids Scaling and decarborising of parts
- Environmentally friendly fuel, with minimal sulphur content and sulphur- free emissions
- Very high efficiency with direct firing system Instant heat for faster warm-up and cool-down

TYPICAL SPECIFICATIONS

TECHNICAL SPECIFICATION OF LPG MARKETED		
GENERAL		
➢ Conforming to Indian Standard specifications		**IS 4576**
➢ Vapor Pressure at 65 °C (Max)	Kg/cm^2	16.87
➢ Volatility. Evaporation temp. in For 95% volume at NTP	°C	2
➢ Copper strip corrosion at 38 °C		Not Worse Than 1
➢ Dryness		No free entrained water
➢ Odour		Level 2
CHEMICAL COMPOSITION		
Ethane	%	1 max
Propane	%	38 max
Is-Butane	%	19 max
Nor-Butane	%	41 min
Iso-Pentane and olefins	%	1 max
Volatile sulfur	%	0.003 max
LIQUID		
Density at 15 °C	Kg/liter	0.557
Volume of liquid per kg at 15 °C	Liters	1.85
Vapor pressure at 15 °C	Bar	5.3
Gross Calorific Value	Kcal/kg	11840
Net Calorific Value	Kcal/kg	10920
Boiling Point at atmospheric pressure	°C	0
VAPOR		
Density at 15 °C	Kg/m^3	2.21
Volume of gas per kg at 15 °C	m^3	0.48
Latent heat of vaporization at 15 °C	Kcal/kg	86
Gross Calorific Value	$Kcal/Nm^3$	26200
Net Calorific Value	$Kcal/Nm^3$	24100
Air required for combustion	m^3/m^3	29

HYDROGEN PRODUCTION

Demand for hydrogen will increase in the upcoming years as a result of stricter environmental legislation. Not only legislation but more extensive processing of residues and higher diesel demand compared with petrol will also increase hydrogen's demand. Hydrogen volumes consumed increasingly exceed those produced in a platformer and have to be supplemented by other sources.

Main processes for hydrogen on-site supply:

- Steam reforming of methane or other hydrocarbons

- Recovery from refinery off-gases
- Recovery from syngas
- Gasification of oil refining residues.

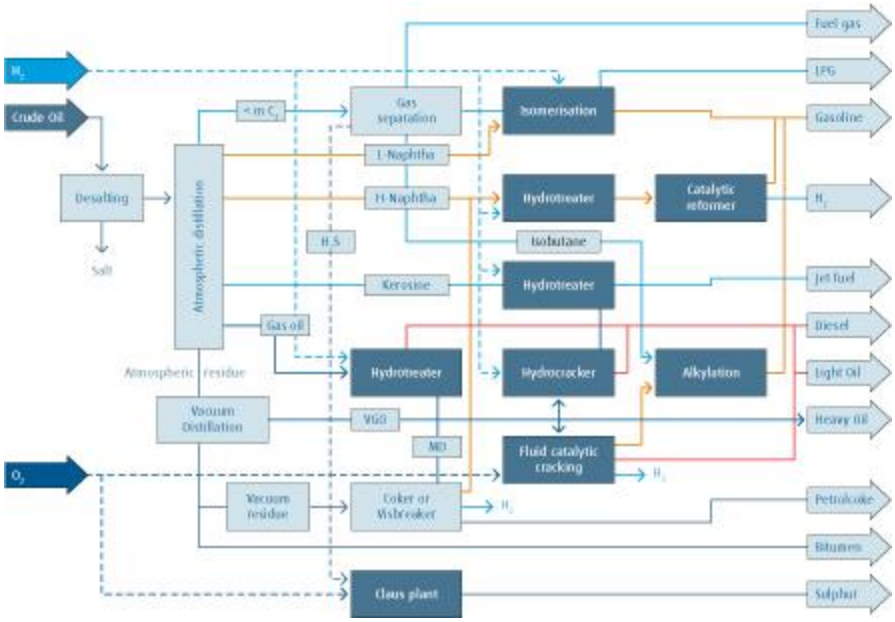

CONCLUSION

Counters and timers are used to easily create measurement and generation applications that were previously difficult or impossible to create. Whether you are counting digital signals, performing PWM, or generating pulse trains, counters provide useful features to accommodate your needs. Counters that are included on multifunction DAQ devices and NI Compact DAQ chassis are easily integrated into larger and more complex applications, making your test, measurement, and control applications more powerful. Thus the process becomes very successful.

REFERENCES

Wikipedia:

- Programmable logic controller

- Ladder logic
- IEC 61131-3 PLC programming language standards
- **SCADA**

Wikiversity:

- Automation template

Others:

- PLC PLC Ladder Logic Programming
- PLC Complete Tutorial
- Basic Guide to PLCs
- Management of your company's PLC
- Online PLC Training
- Interview with Dick Morley (pdf)
- Logic to Ladder Diagram (pdf)
- How to program an Allen Bradley PLC

Automation of Ilmenite Grinding System Using PLC

Nikhilesh J.R[1] ,Hemanth R.S[2], Kannan R.S[3] and Prem Sanker[4]

[1]*M.Tech, Electronics and Communication, Govt. College of Engineering,Kannur,India*

[2]*M.Tech, Applied Electronics, Bannari Amman Institute of Technology, Sathyamangalam,India*

[3&4] *B.Tech,Electronics and Instrumentation,Sarabhai Institute of Science and Technology,Trivandrum,India*

***Abstract*— The raw material used for the production of titanium dioxide pigment is ilmenite. The Ore is stored in Ilmenite godown and the first unit of the process is grinding. With the help of EOT crane ilmenite is dumped in a bunker on the top of which is provided a sieve to remove stone and other waste particles present in the ore. Another sieve with the small mesh size and shaker mechanism is attached with the unit to remove still smaller dirt particles. From here it is carried to the milling section by means of a bucket elevator and a long belt conveyor.The process is automated using Programmable Logic Controller (PLC).**

***Index Terms*—Ilmenite, mills, PLC, titanium dioxide.**

I. INTRODUCTION

Travancore Titanium Products Ltd. was incorporated on 18th of December 1946, to produce pigment grade Titanium dioxide from ilmenite which is abundantly available as placer deposits on beaches. The Company which started production at a modest rate of 5 tonnes per day, increased its capacity in stages to the present level of 40-45 tonnes per day. Subsequently, a major expansion programme was undertaken and completed in 1973, increasing the realizable capacity to 45 tonnes per day of anatase grade TiO2. To meet the increased requirement of sulphuric acid, a third acid plant of 300 tonnes per day capacity was also put on stream.

Subsequently, a modern sulphuric acid plant was commissioned in 1996, which utilizes the tail gas recycling DCDA (Double Catalysis Double Absorption) technology. The alkali scrubbing system incorporated therein helps to keep sulphur dioxide emissions well within permissible limits and helps in maintaining a clean environment.The total man-power employed at present is around 1300.

Titanium dioxide finds use in a variety of industrial products such as paints, foot wears, toilet soaps, ceramic products, artificial fibers, pharmaceutical preparations, rubber products, plastics, paper, printing inks, textile printing formulations, flooring materials, cosmetics, welding rods etc. Its extreme whiteness, perfect non toxicity and chemical inertness make it an ideal choice as a white pigment. The light scattering property of finely divided titanium dioxide is unmatched by any other known material. Titanium Dioxide is available in two crystalline forms, viz, anatase and rutile. The relatively softer Anatase is the right material for delustering artifical fibres. At Travancore Titanium Products Ltd., Anatase grade

Titanium Dioxide is produced by the conventional sulfate route. A programmable logic controller (PLC) or programmable controller is a digital computer used for automation of electromechanical processes, such as control of machinery on factory assembly lines, amusement rides, or lighting fixtures.

In section II we present the process of grinding system. In section III, we discuss working of the automated system. In section IV, we discuss about the PLC and in section V we discuss about the advantages of the automated system. Finally section VI summarizes this work with some results and conclusions

II. GRINDING SYSTEM

The ore is stored in Ilmenite godown and the first unit of the process is grinding. With the help of EOT crane ilmenite is dumped in a bunker on the top of which is provided a sieve to remove stone and other waste particles present in the ore. Another sieve with a small mesh size and shaker mechanism is attached with the unit to remove still smaller dirt particles. From here it is carried to milling section by means of a Bucket elevator and a long belt conveyor.

A. *Mill Section*

There are two grinding Ball Mills in all which are called Mukand Mills, each having a capacity of four tones per hour.

The operation of the ball mill is of a closed circuit type. In this process the oversized particles are separated and returned to the mill for further size reduction. This is because in normal grinding lots of energy is wasted in regrinding (or over grinding) particles that are already fine enough. Hence it is economical to remove partially ground material from the mill and pass it through a size separation device (like cone classifier), the undersize becomes the product and the oversize is returned to the reground.. The main part of milling section are Millfan, Mill, Rotary classifier, Double cone classifier, Cyclone, Viscobeth, Ductings, Dampers.

Air discharged from the fan enters into the mill through the venturi pipe. This hollow pipe extends inside from the rotary classifier and the projects nearer to the discharge end of the mill. The air travels inside the mill and returns after cycling along with the ground ilmenite to the rotary classifier near the discharge end of the mill. The scoopes in the rotary classifier separates the heavier particles and return it to the mill for further grinding through the venture. The ground ilmenite escaped through the annular space of the rotary classifier reaches the double cone classifier.

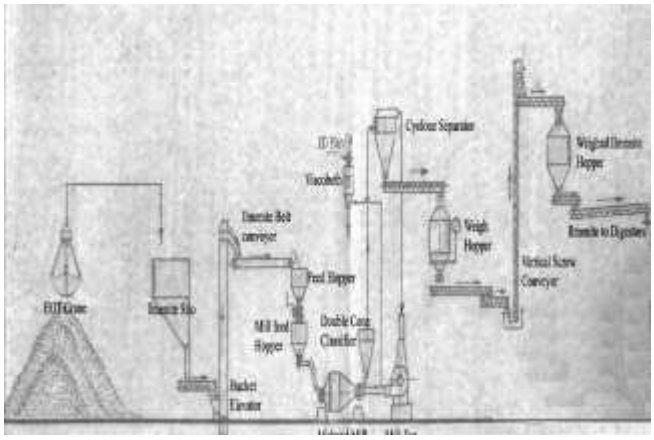

Fig 1: Grinding Section

B. Double cone classifier

It comprises of two fabricated and concentrically mounted cones with an annulus between them. At the top of those cones a series of vertically mounted vanes permit air to pass from the outer to the inner cone.The partly ground ilmenite travels through the annulus of the classifier. At the top of it creates a centrifugal effect due to reason that the vanes are positioned in such a way that the dust laden air is obstructed by the control lever. The ilmenite with the air takes a centrifugal coarse, with the coarser particles to the periphery and the finer at the center. Due to attrition and weight the coarse particles at the periphery falls down to the flapper valve, which is balanced on a counter weight. The coarse oversized particles are returned to the mill to be reground.

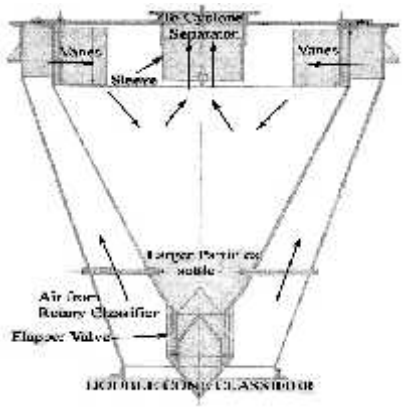

Fig.2: Double Cone Classifier

When the mill is normal, the counter weights at the end of the flapper valve moves up and down, which ensures the separation to a greater extent. This flapper valve also resist the direct entering of air into the classifier but only through the annulus of the cone. The finer particles coming to the centre of the classifier due to the centrifugal velocity of the air coming through the vanes, then passes through a sleeve positioned it at the centre.

C .Cyclone classifier

Cyclonic separation is a method of removing particulates from an air, gas or water stream, without the use of filters, through vortex separation. Rotational effects and gravity are used to separate mixtures of solids and fluids.

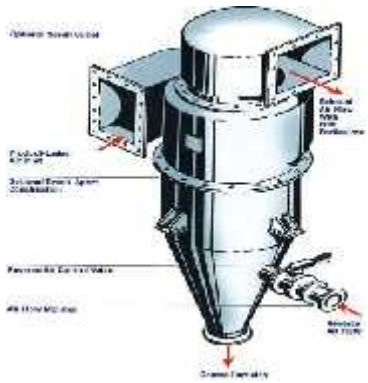

Fig.3: Cyclone classifier

A high speed rotating (air) flow is established within a cylindrical or conical container called a **cyclone**. Air flows in a spiral pattern, beginning at the top (wide end) of the cyclone and ending at the bottom (narrow) end before exiting the cyclone in a straight stream through the center of the cyclone and out the top. Larger (denser) particles in the rotating stream have too much inertia to follow the tight curve of the stream and strike the outside wall, falling then to the bottom of the cyclone where they can be removed. In a conical system, as the rotating flow moves towards the narrow end of the cyclone the rotational radius of the stream is reduced, separating smaller and smaller particles. The cyclone geometry, together with flow rate, defines the *cut point* of the cyclone. This is the size

of particle that will be removed from the stream with a 50% efficiency. Particles larger than the cut point will be removed with a greater efficiency, and smaller particles with a lower efficiency.

D. Viscobeth

Designed to handle heavy dust loads, a dust collector system consists of a blower, dust filter, a filter-cleaning system, and a dust receptacle or dust removal system. It is distinguished from air cleaners which use disposable filters to remove dust.The dust laden air from the cyclone separator enters into the lower chamber through the vent pipe. Immediately on entering the chamber, the air loses the velocity due to the reason that the chamber is an expanded one. So normally the heavier particles in the air deposits at the bottom of the chamber. In a viscobeth there may be more than one compartment doing its duties independently. The dust thus collected at the lower chamber is discharged by the rotary function of the valves fitted at the bottom to the screw conveyor and then to the weigh hoppers.

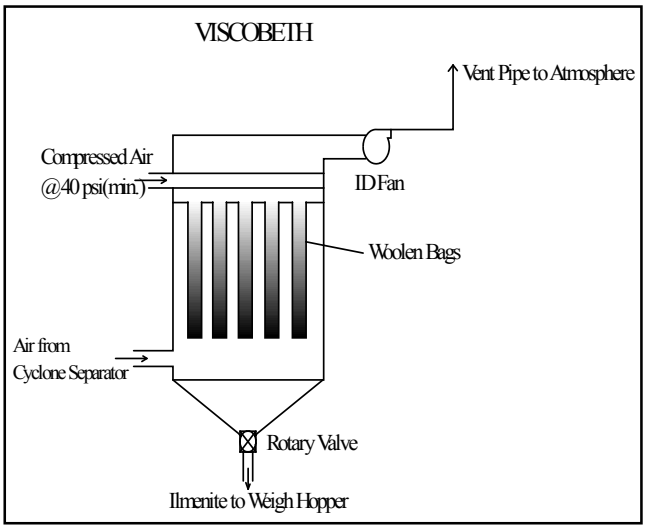

Fig.4: Viscobeth

The lighter particles are carried with the air stream upward through the spigot in the filter tube plate. The dust is collected into the sides of the filter tubes, while it comes through the woolen clothes bags fixed at the ends. There are 8 rows of 8 bags each that is, a total of 64 bags. The cleaned air then passes through the damper box and the open main damper into the common main suction header and is discharged. The cleaned is passed through a fan (visco-fan) provided to create a suction effect in the system.

E. Drawbacks

1) More human attention required for smooth running.
2) Lots of energy wastage when any trip condition occurs.
3) High chances of failure.
4) No control room.
5) Not user friendly

III. AUTOMATED SYSTEM

The new system is so designed that all the drawbacks of the current system are rectified. Initially, the viscobeth is turned on to clear the air paths. This is very important, to ensure the free flow of ground particles through the system. After this, the air supply to the woolen bags (filters) is checked. It verifies all the four pressure points, namely, the pressures at feed chute, main blower, vent and the rotary classifier. If the four pressure points are satisfying the rated pressure, then the cyclone discharge conveyor is switched on. The

pressure point at rotary classifier and viscobeth are negative. This is to creative a sectional force which ensure that the dust will not escape from the system, creating dust pollution. The other pressure points are positive.

Then the rotary classifier and double cone classifier are switched on sequentially, followed by cyclone separator. Now the system check for the cooling water as well as the oil supply to ball mill simultaneously. If it is not satisfied, the sufficient supply is provided. Now the silo valve, which is a solenoid valve, is opened and the ilmenite is provided to the vibratory screen and then to the screw conveyor. The screw conveyor carries this to the bucket elevator. The turn-on of these sections take place sequentially. If a fault or trip condition occurs to any of the system, the previous stages are shut off. Now the ilmenite is transported from the bucket elevator to the feed hopper through a belt conveyor system. We are providing two level switches at the feed hopper- a high level switch and a low level switch.

When the high level is attained, the previous stages are stopped to prevent overflow, as well as the feed hopper outlet valve is opened. Whereas, when the low level is reached, the system ensures whether the previous systems are turned on. These switches are also used for ensuring trip conditions.The next stage is the mill feed hopper. Here also a high level and a low level switch are provided. Their action is also similar to the level switches at the feed hopper stage. Now when high level is reached, the mill fan is turned on followed by the ball mill. Sequentially, the mill feed hopper outlet valve is also opened. The flow to the mill is controlled using a flow control valve. The load inside the ball mill should be maintained to some optimum value for efficient running, saving time and power.

Under-load affects efficiency, since amount of material is less than rated quantity. Whereas over-load causes the motor to drag more power, which also affects efficiency. Motor current is checked for this and trips are provided. Two weigh hoppers are provided with two level switches each. Weigh hoppers work in a “1 duty 1 standby” mode. First, the control valve will be closed, which causes the weigh hopper 1 to get filled first. When the ilmenite level inside the hopper reaches high, the feed-in valve opens and causes the weigh hopper 2 to get filled. Meanwhile, weigh hopper 1 delivers the ilmenite to the next stage. The rate of feed-in is greater than feed-out. When the weigh hopper 2 reaches its high level, the feed-in valve again closes and the weigh hopper 2 gets filled again. During this time, the weigh hopper 2 delivers the ilmenite.

IV. PROGRAMMABLE LOGIC CONTROLLER (PLC)

A programmable logic controller (PLC) or programmable controller is a digital computer used for automation of electromechanical processes, such as control of machinery on factory assembly lines, amusement rides, or lighting fixtures. PLCs are used in many industries and machines. Unlike general purpose computers, the PLC is designed for multiple inputs and output arrangements, extended temperature ranges, immunity to electrical noise, and resistance to vibration and impact. Programs to

control machine operation are typically stored in battery-backed or non-volatile memory. A PLC is an example of a real time system since output results must be produced in response to input conditions within a bounded time, otherwise unintended operation will result.

The PLC used here is Schneider's SR2B201BD compact smart relay**.** The inputs and outputs are listed at the end of the ladder program, as per the Schneider's PLC addressing conventions. There are two types of inputs and outputs- digital and analog. For the Automated Grinding System, we are using eight analog inputs , ten digital inputs and fifteen digital outputs.

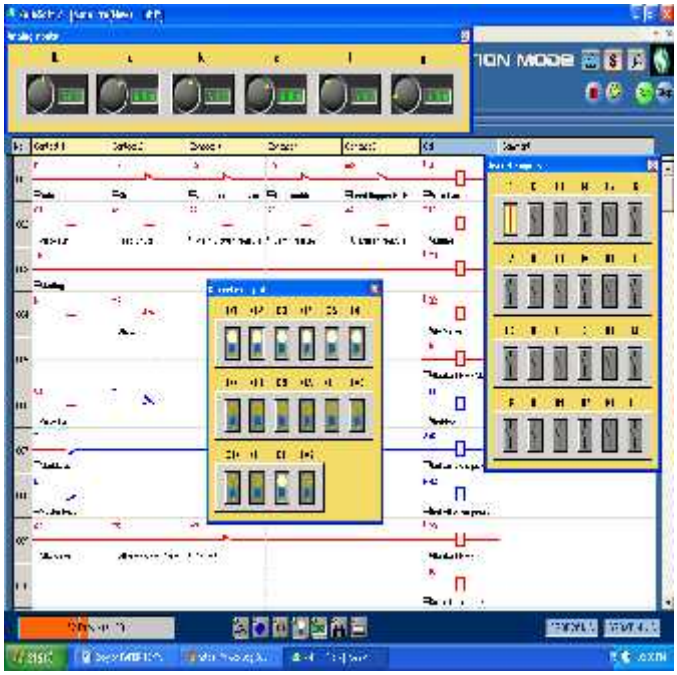

Fig.5: PLC simulation of Ilmenite Griniding System

V. ADVANTAGES

1) Fully automated.
2) Less human attention needed for the complete working.
3) Economical.
4) Energy saving.
5) Overflow rectified.
6) Control panel provided.
7) Chance of failure reduced.

VI. RESULTS AND CONCLUSION

The ilmenite grinding system is automated using PLC. Ladder logic were done by using Zelio software and it is implemented on Schneider PLC.Simulation of the process is shown below

As we have seen, the industrial scenario continues to find the ways of using more sophisticated technology and we hope that this project on Automation of Ilmenite Grinding System will be a milestone in the pathway of Travancore Titanium Products Ltd.'s progress. We also believe that, the program that has been developed will provide a high degree of reliability in the operation and also low operating costs.

REFERENCES

[1] Zou Jin-hui; Chen Wei; Tang Zhan-jun; Huang Song-wei, "Fuzzy Intelligent Control for Ore-giving System of Grinding Classification," Measuring Technology and Mechatronics Automation (ICMTMA), 2010 International Conference on , vol.2, no., pp.329,332, 13-14 March 2010

[2] Jinhui Zou; Jiangchun Xu; Wei Chen; Songwei Huang, "Integrated automation system of dressing based on PLC and KingView," Biomedical Engineering and Informatics (BMEI), 2010 3rd International Conference on , vol.7, no., pp.2795,2798, 16-18 Oct. 2010

[3] Xiaohong Yang; Shuxu Guo; HongTao Yang, "The establishment of energy consumption optimization model based on genetic algorithm," Automation and Logistics, 2008. ICAL 2008. IEEE International Conference on , vol., no., pp.1426,1431, 1-3 Sept. 2008

[4] Basile, F.; Chiacchio, P.; Gerbasio, D., "A novel approach to PLC programming for distributed automation systems control,"

Emerging Technologies and Factory Automation (ETFA), 2010 IEEE Conference on , vol., no., pp.1,8, 13-16 Sept. 2010

[5] Wei Li; Zhengduo Pang; Haitao Zhang; Guoying Meng, "Design of Multi-Loading Control System for Belt Conveyor," E-Product E-Service and E-Entertainment (ICEEE), 2010 International Conference on , vol., no., pp.1,3, 7-9 Nov. 2010

[6] Chen Xisong; Zhai Junyong; Li Qi; Fei Shumin, "Override and Model Predictive Control of Particle Size and Feed Rate in Grinding Process," Control Conference, 2007. CCC 2007. Chinese , vol., no., pp.704,708, July 26 2007-June 31 2007

[7] Wang Huiqiang; Xing Yanqiu; Xiao Tao, "The control system of belt grinder which based on the touch screen and PLC," Computer Application and System Modeling (ICCASM), 2010 International Conference on , vol.14, no., pp.V14-438,V14-441, 22-24 Oct. 2010

[8] Wang Huiqiang; Cui Jianjun; Zheng Ying; Hu Minying, "The Research and Design of the Belt Grinder which Based on PLC," Informatics in Control, Automation and Robotics, 2009. CAR '09. International Asia Conference on , vol., no., pp.8,11, 1-2 Feb. 2009

SPEED AND TORQUE CONTROL OF TWO- MASS DRIVE SYSTEM USING FRACTIONAL ORDER PID CONTROLLER

Deepu S Devan* and Dr. T K Sunil Kumar†
Electrical Engineering Department
National Institute of Technology Calicut
NITC P.O., Calicut, Kerala - 673601, India
*deepusdevan@gmail.com
†tksunil@nitc.ac.in

Abstract

This report presents the application of a fractional order PID controller and a classical PID controller to a two-mass system like a rolling mill drive. A complete state-space mathematical model for a two-mass system is first developed. Then, a fractional-order PID controller is designed using Genetic Algorithm to regulate the speed of the system. Design procedures for the controllers are given in detail. Finally, corresponding results are compared with classical PID controller. Obtained results are also compared with the results given in the literature for the same system.

Key words: ***Two- mass drive system, Fractional order controller, Genetic Algorithm***

1. Introduction

A vast variety of two-mass systems such as rolling mill drives, robot arms, servo systems, textile drives, throttle systems, conveyor belts, deep-space antenna drives, etc., exist in industrial plants. In these types of systems, a motor is connected to a load machine through a shaft. This construction is called a drive system. The control problem of a drive system composed of a motor connected to a load machine through a shaft is particularly difficult when not all system variables are measurable. The existence of a long shaft between the motor and the load machine is induced very low resonant frequency in the mechanical part of the system. Particularly during transient conditions, the motor speed will be different from the load speed in drive systems. For this reason, high performance speed and torque regulation is required to ensure stable operation conditions. The speed difference results in the coupling shaft stresses, which influence this

mechanical coupling in a negative way. Additionally, speed oscillations decrease the quality of the product and can influence the stability of the control system. In order to ensure stable operation conditions and to reduce speed oscillations that affect the stability of the control, special control techniques are developed, intended to two-mass systems.

The prime objective is to design a conventional PID controller and a fractional order PID controller to regulate the speed of the two mass drive system and hence to ensure stable operation conditions of the system, and to compare the results for the two controllers.

Chapter 1 deals with the introduction of the project report, literature review and objective the project. Chapter 2 deals with the system description. Mathematical modeling and block diagram representation of the system are studied in chapter 3. The different control methodologies used to ensure stability of the system are considered in chapter 4. Then, chapter 5 deals with the simulation results using PID controller. A tuning method based on Genetic algorithm for fractional order controller design is studied in chapter 6.

2.System description

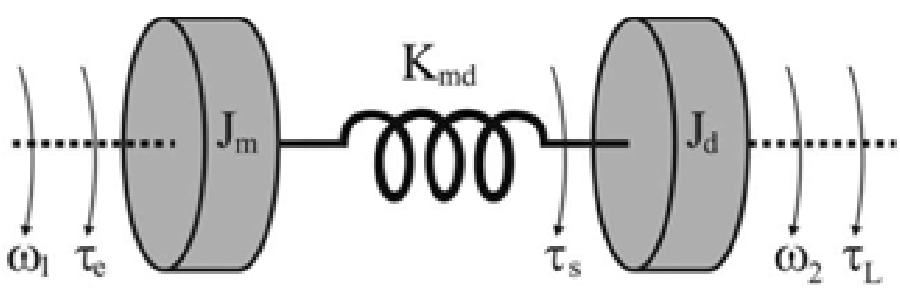

Fig.2.1: Mechanical schematic of a two- mass system

A simple structure of a two-mass resonant system is shown in Fig. 1. The system comprises of the motor and the load, connected through a flexible shaft or transmission element. This flexible shaft or transmission element has non-ideal transmission behavior such as finite torsional stiffness. This finite stiffness can cause unwanted torsional oscillations as well as can stress both

the mechanical and electrical components of the system. The mechanical parts of such systems may have a low resonant frequency so the structural resonance is easily excited by rapid change in speed.

Fig. 1 shows a schematic of a two-inertia servo-drive system consisting of two lumped inertias J_m and J_d, representing the motor and load, respectively, coupled via a shaft of finite stiffness K_{md}. This shaft is subjected to a torsional torque τ_s and excited by a combination of electromagnetic torque τ_e and load-torque perturbations τ_L.

3. Mathematical modeling

In many cases, it can be roughly modeled by a two-mass system only considering the first resonant mode as show in Fig. 2.1 where

τ_e is the electromagnetic torque

τ_s is the torsional torque

τ_l is the load torque perturbations

J_m and J_d are two lumped inertias

K_{md} is the stiffness of the shaft

ω_1 is the motor speed

ω_2 is the load speed

The equation representing the motor dynamics is

$$J_m \frac{d}{dt}\omega_1 = \tau_e - \tau_s \tag{3.1}$$

The damping of 2-mass system due to the friction is very low, so that it can be neglected without affecting the analysis accuracy. The following Laplace transfer functions can be derived from the

dynamic mechanical principles:

$$\omega_1 = \frac{1}{J_m s}(T_m - T_{sh})$$
$$T_{sh} = \frac{K_{sh}}{s}(\omega_1 - \omega_2)$$
$$\omega_2 = \frac{1}{J_L s}(T_{sh} - T_L) \tag{3.2}$$

From (3.1), we can get the block diagram of the system shown as Fig.2.2 (b).
The state space model of the system is given by (3.3).

$$\frac{d}{dt}\begin{bmatrix}\omega_1(t)\\ \omega_2(t)\\ \tau_s(t)\end{bmatrix} = \begin{bmatrix}0 & 0 & -\frac{1}{T_1}\\ 0 & 0 & \frac{1}{T_2}\\ \frac{1}{T_3} & \frac{1}{T_3} & 0\end{bmatrix}\begin{bmatrix}\omega_1(t)\\ \omega_2(t)\\ \tau_s(t)\end{bmatrix} + \begin{bmatrix}\frac{1}{T_1}\\ 0\\ 0\end{bmatrix}[\tau_e] + \begin{bmatrix}0\\ -\frac{1}{T_2}\\ 0\end{bmatrix}[\tau_L] \tag{3.3}$$

$$Y = \begin{bmatrix}1 & 0 & 0\end{bmatrix}\begin{bmatrix}\omega_1(t)\\ \omega_2(t)\\ \tau_S(t)\end{bmatrix}$$

Since damping losses are relatively low, they are neglected without affecting the simulation analysis. Also, nonlinear parts of the real drive system such as backlash, mechanical hysteresis and nonlinear friction were not taken into account.

The eigen function of the system is as (3.4).

$$|sI - A| = s[s^2 + (\frac{K_{sh}}{J_m} + \frac{K_{sh}}{J_L})] = 0 \tag{3.4}$$

The eigen values of the system are s_1=0 and $s_{2,3}$, which are a pair of pure imaginary roots as follows.

$$s_{2,3} = \pm j\sqrt{K_{sh}(J_m^{-1} + J_L^{-1})} \tag{3.5}$$

Then, a conclusion can be drawn according to the obtained eigen values, from the control principles, that the 2-mass driven system is in the marginally stable case.

The transfer functions of ω_m/T_L and ω_m/T_e are given by (3.6) and (3.7).

$$G_1(s) = \frac{\omega_m}{T_L} = C(sI - A)^{-1} B_1 = \frac{K_{sh}}{J_m J_L s} \frac{1}{s^2 + \omega_0^2} \tag{3.6}$$

$$G_2(s) = \frac{\omega_m}{T_m} = C(sI - A)^{-1} B_2 = \frac{1}{J_m s} \frac{s^2 + \omega_a^2}{s^2 + \omega_0^2} \tag{3.7}$$

where ω_0 is the resonant frequency and ω_a is the antiresonant frequency.

$$\omega_0 = \sqrt{K_{sh}(J_m^{-1} + J_L^{-1})}$$
$$\omega_a = \sqrt{K_{sh} J_L^{-1}} \tag{3.8}$$

From (3.5) and (3.6), there is an antiresonant frequency in the $G_2(s)$, it enhances the stability from T_m to ω_m. But there is only a resonant frequency in the $G_1(s)$, the system is easy to occur torsional vibration when load torque(T_L) changes.

The nominal parameters of the two- mass system are tabulated below.

Symbol	Quantity	Value
K_S	shaft stiffness	242 Nm/rad
B_S	shaft damping coefficient	15×10^{-2} Nm/rad/s
J_M	motor inertia	6.41×10^{-2} kg.m^2
B_M	coefficient of motor viscosity	2.1×10^{-3} Nm/rad/s
J_L	load inertia	5.23×10^{-2} kg.m^2
B_L	coefficient of load viscosity	5.3×10^{-2} Nm/rad/s

Table 3.1: Nominal parameters of the two- mass plant

4. Control Methodology

4.1 PID control

In industrial applications, the PID-type control is usually used due to its simple scheme. The control problem is to find a suitable control law so that the system states can track desired reference commands. To achieve this control objective, define an error state vector $e = x - x_d$ and its derivative $\dot{e} = \dot{x} - \dot{x}_d$.

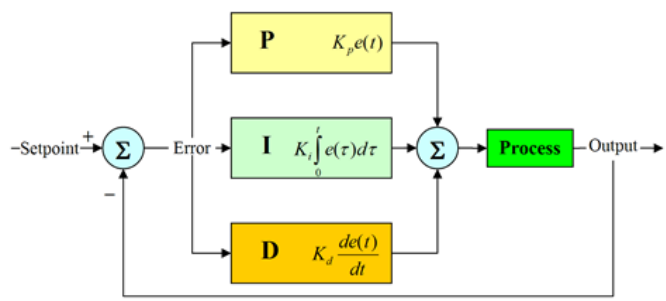

Fig. 4.1: PID Controller

The PID control law can be represented as

$$U(t) = K_p e(t) + K_i \int e(t) + K_d \frac{de(t)}{dt} \tag{4.1}$$

ie.,

$$u_c = k_p * e + k_i / s * e + k_d s * e \tag{4.2}$$

Selection of the values for the gains in the PID control system has a significant effect on the control performance. In general, they are determined according to desirable system responses, e.g., rise time, settling time, etc. With proportional control, the gain matrix K_P is designed according to the amount of initial tracking error. Gain matrix K_i is selected based on the amount of steady-state error. In addition, the differential controller is good for the faster system response and the reduction of the moving platform tendency to overshoot, and the matrix K_d is chosen as small as possible to prevent enlarging the noise effect.

4.2. Fractional Order PID controller

The design basis of the Fractional Order Controller (FOC) in discrete domains with the discrete transfer function is a very useful method because the proposed method is a time-saving, simple, rapid-configurable, and near-to-optimal method. For the aforementioned reasons, an FOC in discrete domains with the discrete transfer function is considered and applied to a two-mass control system.

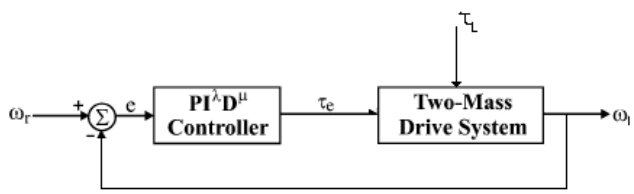

Fig. 4.2: Fractional order PID controller design

The general transfer function of the above controller is given by

$$C(s) = \frac{U(s)}{E(s)} = K_P + K_i s^{-\lambda} + K_d s^{\mu}; [\lambda, \mu > 0] \tag{4.3}$$

where, E(s) is the error

U(s) is the controller's output

K_p is the proportional constant

K_d is the differentiation constant

K_i is the integration constant

λ is the order of the integrator

μ is the order of the differentiator

The complexity of this controller is evident due to the increase in the number of control parameters. There are five different parameters (Kp, Ki, Kd, λ, and μ) that have to be tuned, which increases the flexibility of achieving preset design requirements such as steady-state errors, phase and gain margins, and robustness. The challenge of this work is to develop a

realizable FOPID controller that exhibits a robust performance with a smaller number of parameters, yet achieving the same design requirements.

The equation for FOPID controller's output in the time domain is

$$u(t) = K_P e(t) + K_i D^{-\lambda} e(t) + K_D D^{\mu} e(t) \tag{4.4}$$

Taking λ= 1 and μ= 1, we obtain a classic PID controller.

λ = 1 and μ = 0 give a PI controller.

λ = 0 and μ = 1 give a PD controller.

The discritised form of the transfer function is given by

$$C(z^{-1}) = \frac{U(z^{-1})}{E(z^{-1})} = K_P(\omega(z^{-1}))^{-\lambda} + K_D(\omega(z^{-1}))^{\mu} \tag{4.5}$$

In order to determine the controller parameters *Kp*, *Ki*, *Kd*, λ, and μ, the transfer function of the system is required, primarily. As can be seen from Fig. 2.2 (b), the transfer function of the considered two-mass system is in the form of following expression:

$$\omega_2(s) = \frac{K_{md} T_e(s)}{s(s^2 J_d J_m + K_{md} J_m + K_{md} J_d)}$$
$$G_{TMS(s)} = \frac{\omega_2(s)}{T_e(s)} = \frac{K_{md}}{s(s^2 J_d J_m + K_{md} J_m + K_{md} J_d)} \tag{4.6}$$

It can be expected that the FOPID controller may enhance the systems control performance. One of the most important advantages of the FOPID controller is the better control of dynamical systems, which are described by fractional order mathematical models. Another advantage lies in the fact that the FOPID controllers are less sensitive to changes of parameters of a controlled system. This is due to the two extra degrees of freedom to better adjust the dynamical properties of a fractional order control system.

4.2.1. Fractional Order PID controller tuning based on Genetic Algorithm

Genetic Algorithms (GAs) are a stochastic global search method that emulates the process of natural evolution. Using genetic algorithms to perform the tuning of the controller will result in the optimum controller being evaluated for the system every time.

Consider a unity feedback control system. The transfer function of the plant is

$$G_P(s) = \frac{b_0 + b_1 s + b_2 s^2 + \ldots + b_{n-1} s^{n-1}}{a_0 + a_1 s + a_2 s^2 + \ldots + a_{n-1} s^{n-1}} \tag{4.7}$$

The transfer function of FOPID controller for the system is

$$G_c(s) = K_P + \frac{K_i}{s^{\lambda}} + K_d s^{\mu} \tag{4.8}$$

In the design of the controller, we have considered aspects of frequency domain gain margin A_m and phase margin Φ_m, which is mainly to ensure the stability of feedback control system. In other words, the controller must meet the following relationship:

$$\begin{aligned} G_c(j\omega_P)G_P(j\omega_P) &= \frac{-1}{A_m} \\ G_c(j\omega_g)G_P(j\omega_g) &= -\cos\Phi_m - j \quad \sin\Phi_m \end{aligned} \tag{4.9}$$

In the Nyquist plot, ω_p is the phase crossover frequency, the phase change point behind by $-\Pi$ and ω_g is the gain crossover frequency. Put the above equations into $G_c(s)$, we can see that the controller gain K_p, K_i, K_d and the fractional times λ and μ must meet the following relationship:

$$K_P + \frac{K_i}{\omega_P^{\lambda}} \cos\frac{\Pi\lambda}{2} + K_d \omega_P^{\mu} \cos\frac{\Pi\mu}{2} = R_P \tag{4.10}$$

$$\frac{-K_i}{\omega_P^{\lambda}} \sin\frac{\Pi\lambda}{2} + K_d \omega_P^{\mu} \sin\frac{\Pi\mu}{2} = I_P \tag{4.11}$$

$$K_P + \frac{K_i}{\omega_g^{\lambda}} \cos\frac{\Pi\lambda}{2} + K_d \omega_g^{\mu} \cos\frac{\Pi\mu}{2} = R_g \tag{4.12}$$

$$\frac{-K_i}{\omega_g^{\lambda}}\sin\frac{\Pi\lambda}{2}+K_d\omega_g^{\mu}\sin\frac{\Pi\mu}{2}=I_g \tag{4.13}$$

ω_p, and ω_g are the phase crossover frequency and gain crossover frequency respectively.

λ and μ are the order of integrator and order of differentiator respectively.

When the parameters ω_p, ω_g, λ and μ are known, the controller values can be decided by the formula:

$$K_d=\frac{\omega_P^{\lambda}I_P-\omega_g^{\lambda}I_g}{\sin\frac{\Pi\mu}{2}\left(\omega_P^{\lambda+\mu}-\omega_g^{\lambda+\mu}\right)} \tag{4.14}$$

$$K_i=\frac{\omega_P^{\lambda}\omega_g^{\lambda}(\omega_g^{\mu}I_P-\omega_P^{\mu}I_g)}{\sin\frac{\Pi\lambda}{2}\left(\omega_P^{\lambda+\mu}-\omega_g^{\lambda+\mu}\right)} \tag{4.15}$$

$$K_P=R_g-\frac{1}{\omega_P^{\lambda+\mu}-\omega_g^{\lambda+\mu}}\left(\frac{\cos\frac{\Pi\lambda}{2}}{\sin\frac{\Pi\lambda}{2}}\left(\omega_P^{\lambda}\omega_g^{\mu}I_P-\omega_P^{\lambda+\mu}I_g\right)+\frac{\cos\frac{\Pi\mu}{2}}{\sin\frac{\Pi\mu}{2}}\left(\omega_P^{\lambda+\mu}I_P-\omega_P^{\mu}\omega_g^{\lambda}I_g\right)\right) \tag{4.16}$$

According to the above formula, the parameters ω_p, ω_g, λ and μ must meet the following condition:

$$\left(R_P-R_g\right)\left(\omega_P^{\lambda+\mu}-\omega_g^{\lambda+\mu}\right)-\frac{\cos\frac{\Pi\lambda}{2}}{\sin\frac{\Pi\lambda}{2}}\left(\omega_g^{\mu}I_P-\omega_P^{\mu}I_g\right)\left(\omega_g^{\lambda}-\omega_P^{\lambda}\right)=0 \tag{4.17}$$

Now, the parameter tuning method in fractional order PID controller using the genetic algorithm is to find the minimum of the objective function by search for optimal parameters ω_p, ω_g, λ and μ. In order to reduce unit step response overshoot, ISE is a more ideal performance criteria, so we use ISE performance criteria as the objective function in the design of controller. The objective function is to find the minimum integral square error, expressed as follows:

$$J=\int_0^{\infty}e^2(t)dt=\frac{1}{2\Pi j}\int_{-\infty}^{\infty}E(s)E(-s)ds \tag{4.18}$$

5. Results

Case study 1

Let us consider an optimization problem as shown below.

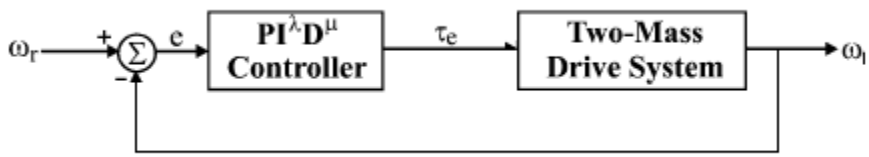

Fig. 5.1 Fractional order PID controller design

Find the values of Kp, Ki, Kd, λ and μ so as to minimize:

$$J = \int (1 - y(t))^2 \, dt$$

subjected to the constraints:

Population size=100, Generations= 200, Crossover fraction= 0.75, Popinit range= [0.01, 1].

The result obtained for the above optimization problem is as shown below.

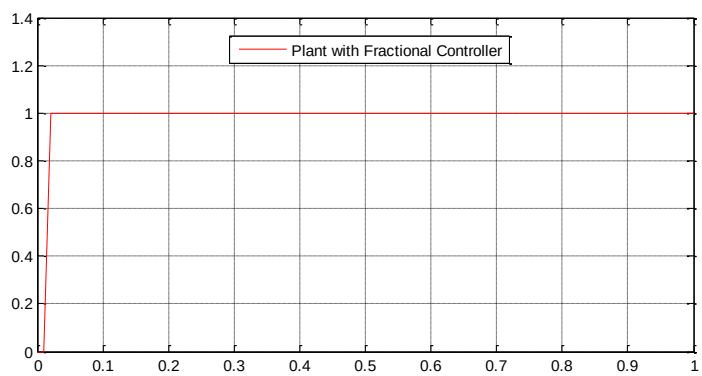

Fig. 5.2: System response with FOPID controller with K_p= 1.9338, K_d= 7.314, K_i= 2.0086, λ=0.13561, μ= 5.41429 and J= 2.0

The fractional order PID controller is given by the expression:

$$C(s) = \frac{7.3184 s^{5.5449} + 1.9338 s^{0.13561} + 2.0086}{s^{0.13561}}$$

Case study 2

Now, let us consider the same optimization problem for a PID controller, where λ=1 and μ=1.

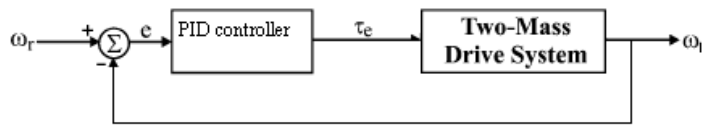

Fig.5.3: Classical PID controller design

So, find the values of Kp, Ki, Kd, so as to minimize:

$$J = \int (1 - y(t))^2 \, dt$$

subjected to the constraints:

Population size=100, Generations= 200, Crossover fraction= 0.75, Popinit range= [0.01, 1].

The result obtained for the above optimization problem is as shown below.

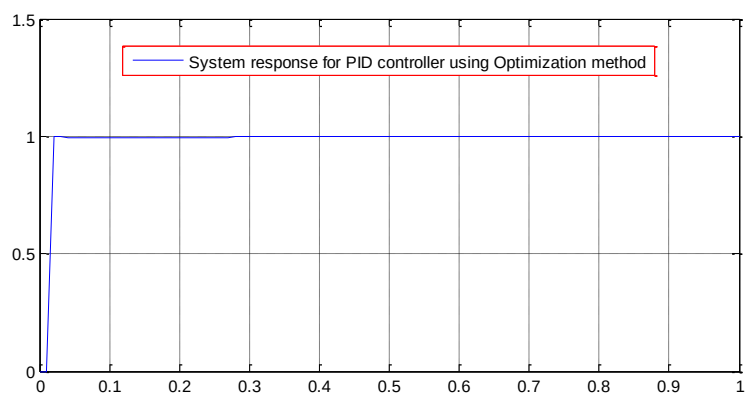

Fig. 5.4: System response with PID controller with K_p= 24.18636, K_d= 31.6295, K_i= 15.3536, λ=1, μ=1 and J= 2.0010

The fractional order PID controller is given by the expression:

$$C(s) = \frac{31.6295s^2 + 24.1863s + 15.3536}{s}$$

Case study 3

Now, we choose the phase margin, $\Phi_m = \frac{\Pi}{6}$ and the gain margin, $A_m = 1.5$ for the two- mass drive system. For the best solution, the parameters of the FOPID controller are:

$$\omega_p = 1.4853 \;, \omega_g = 0.0593 \;, \lambda = 0.6824 \;, \mu = 0.5459$$

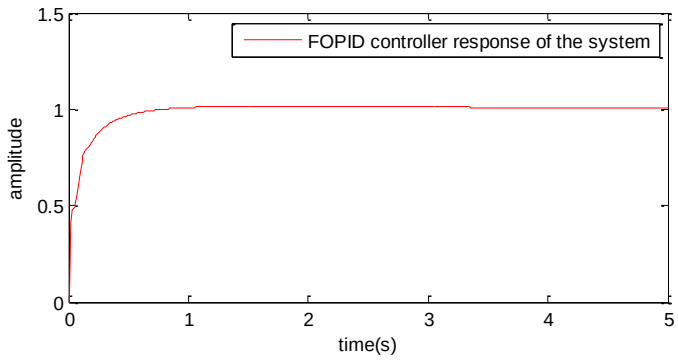

Fig.5.5: Fractional order PID controller step response for the system

The FOPID controller is given by the expression:

$$C(s) = 0.9526 + \frac{0.5201}{s^{0.6824}} + 0.4173s^{0.5459}$$

The simulation result obtained for the two- mass drive system using a PID controller is shown below.

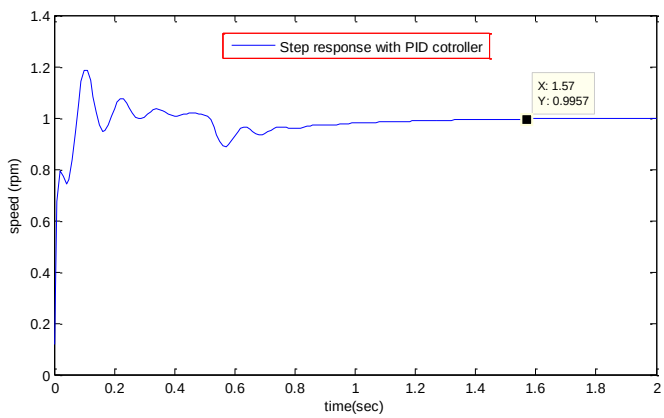

Fig. 5.1: Step response with PID controller when K_p= 9, K_d= 0.01, K_i= 24, $\omega_r = 1$ *and* $\tau_L = 0.8$.

6. Conclusion

The controller design methodologies for the enhanced performance of two- mass servo-drive systems are considered. A fractional order PID controller, based on an optimization problem, genetic algorithm and a conventional PID controller have been investigated with regard

to both the closed- loop robustness and the control of the process variable to a step reference speed. The FOPID controller provides better response than a normal conventional PID controller. For the FOPID controller, the settling time is reduced to 0.02 seconds with no peak overshoot.

7. References

[1] J. K. Ji and S. K. Sul, "Kalman filter and LQ based speed controller for torsional vibration suppression in a 2-mass motor drive system," *IEEE Trans. Ind. Electron.*, vol. 42, no. 6, pp. 564–571, Dec. 1995.

[2] S. Beineke, F. Schütte, and H. Grotstollen, "Comparison of methods for state estimation and on-line identification in speed and position control loops," in *Proc. 7th EPE*, 1997, pp. 364–369.

[3] K. Sugiura and Y. Hori, "Vibration suppression in 2- and 3- mass system based on the feedback of imperfect derivative of the estimated torsional torque," *IEEE Trans. Ind. Electron.*, vol. 43, no. 1, pp. 56–64, Feb. 1996.

[4] K. Peter, I. Schöling, and B. Orlik, "Robust output-feedback $H\infty$ control with a nonlinear observer for a two-mass system," *IEEE Trans. Ind. App.*, vol. 3, no. 3, pp. 637–644, May/Jun. 2003.

[5] S. E. Hamamci, "An algorithm for stabilization of fractional-order time delay systems using fractional-order PID controllers," *IEEE Trans. Autom. Control*, vol. 52, no. 10, pp. 1964–1969, Oct. 2007.

[6] F. M. Bayat and M. K. Ghartemi, "Method for designing PIλDμ stabilizers for minimum-phase fractional-order systems," *IET Control Theory Appl.*, vol. 4, no. 1, pp. 61–70, Jan. 2010.

[7] Ruicheng Zhang, Zhikun Chen, Youliang Yang, Chaonan Tong, "Torsional Vibration Suppression Control in the Main Drive System of Rolling Mill by State Feedback Speed Controller Based on Extended State Observer", *IEEE Trans. Control and Automation.* FrAP-9, pp. 2172- 2177, May 30 to June 1, 2007.

[8] Koksal Erenturk, "Fractional order PID and Active Disturbance Rejection Control of Two-mass drive system", *IEEE Trans. Ind. Electron.*, vol.60, no.9, pp.3806- 3813, Sept. 2013.

[9] Yanzhu Zhang, Jingjiao Li, "Fractional- order PID controller tuning based on Genetic algorithm", IEEE Trans., pp. 764-767, 2011.