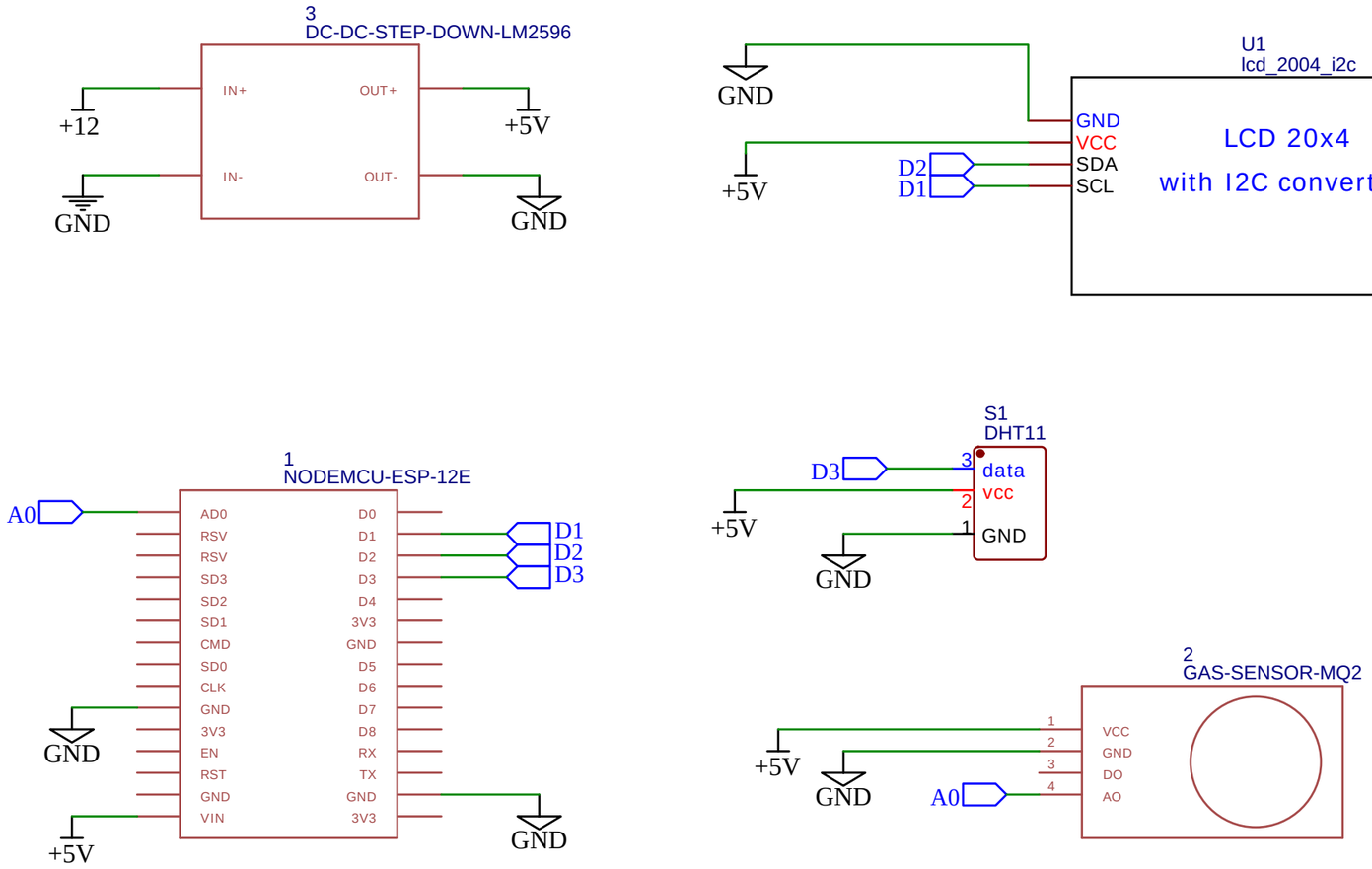

TITLE: NodeMCU + DHT11 + MQ2		REV: 1.0
EasyEDA	Company: Asyoni Elektronik	Sheet: 1/1
	Date: 2021-12-22 Drawn By:	