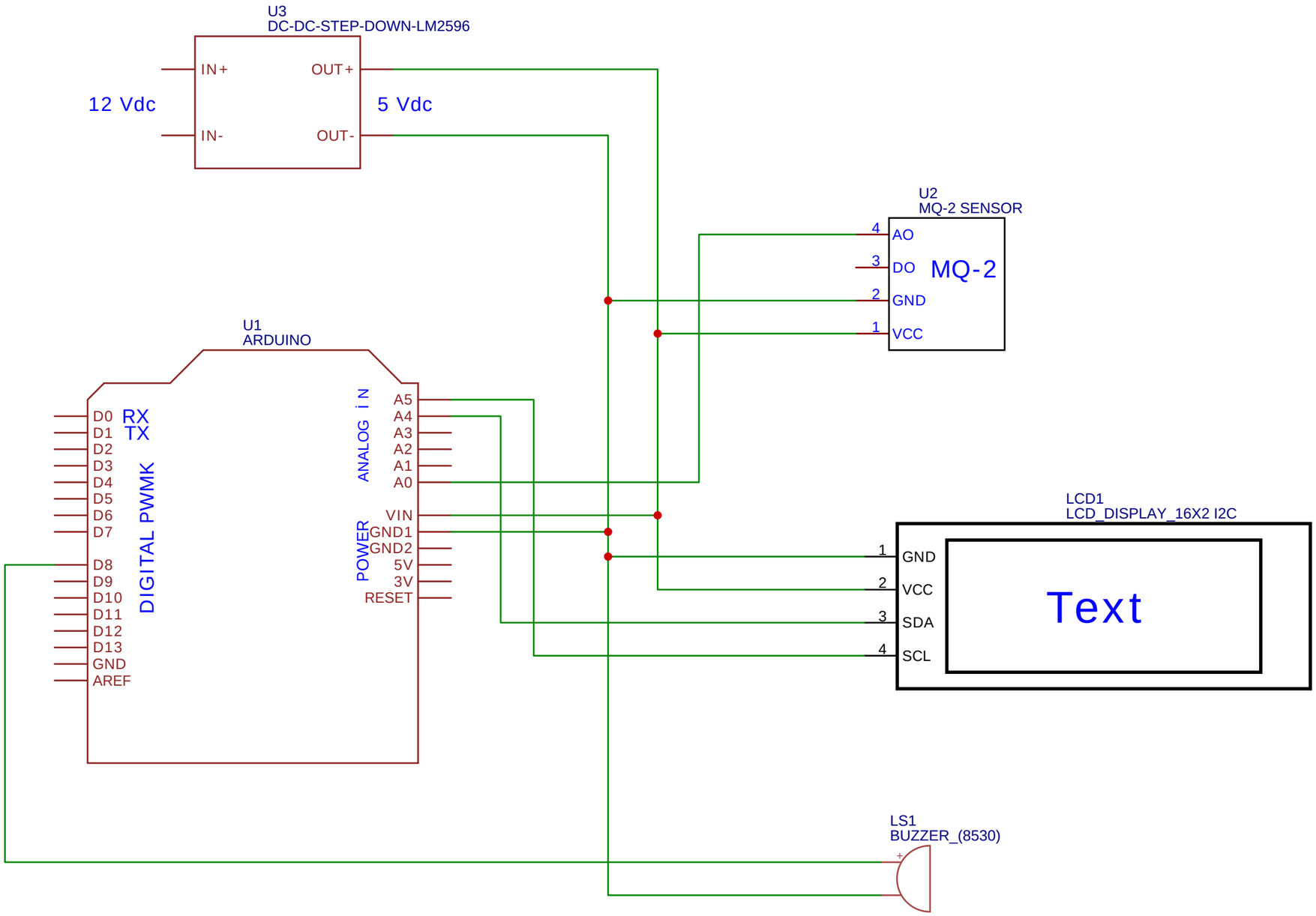

TITLE: Smoke Detector Arduino		REV: 1.0
EasyEDA	Company: www.asyoni.com	Sheet: 1/1
	Date: 2021-11-14 Drawn By: asyoni	