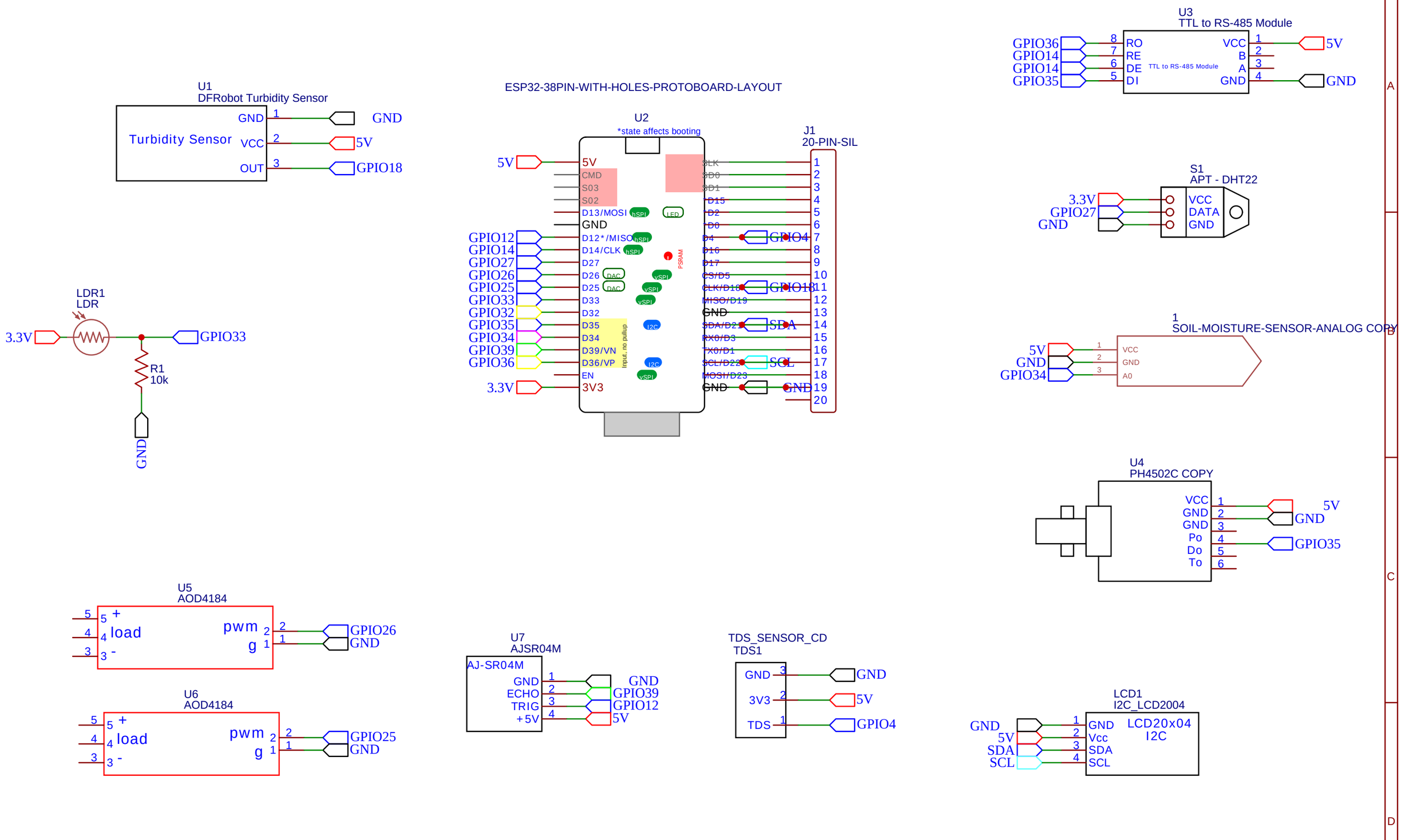

TITLE: Smart Agriculture Monitoring System		REV: 1.0
EasyEDA	Company:	Sheet: 1/1
	Date: 2025-07-10	Drawn By: abhishek.skit.work