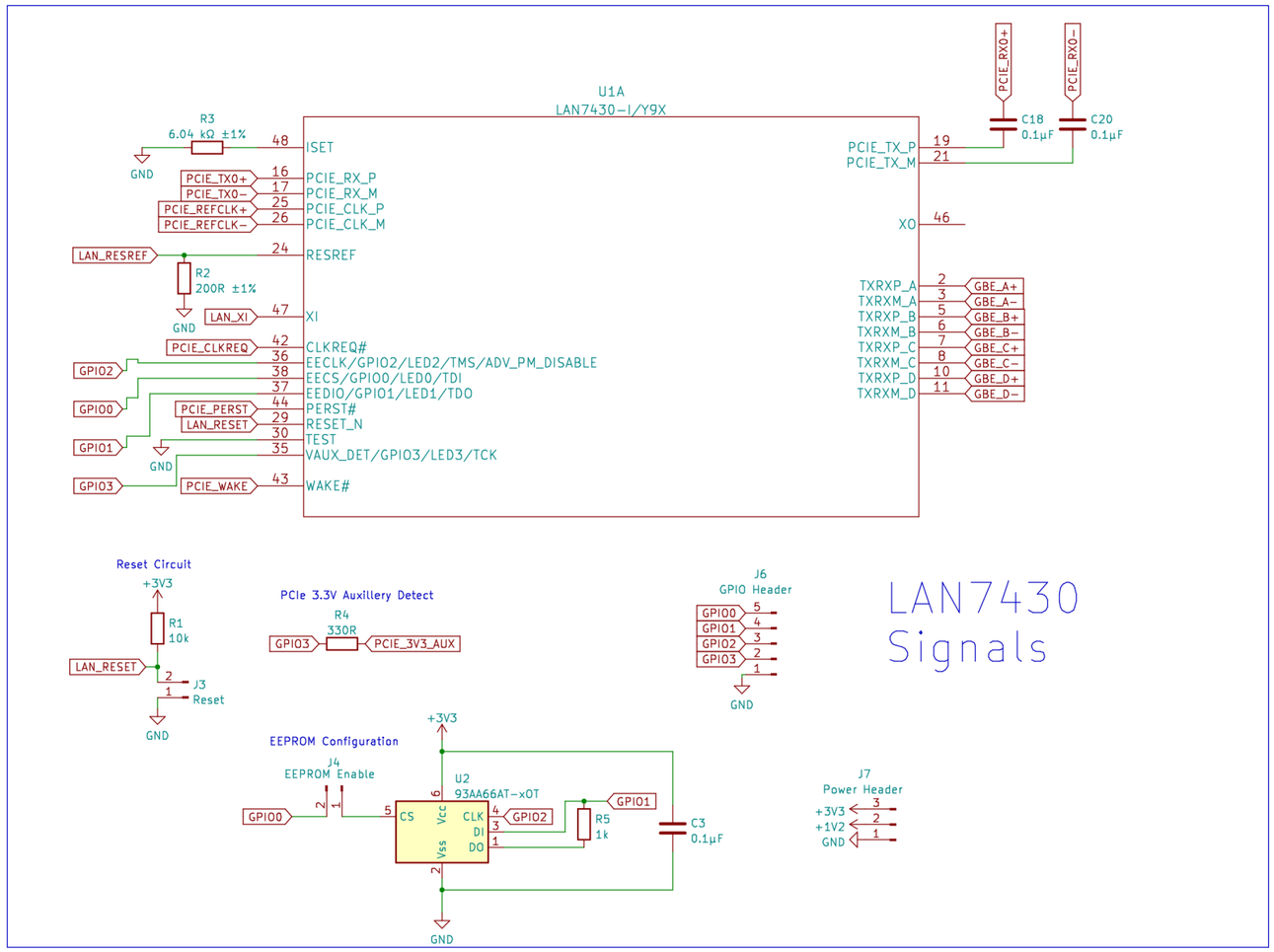

LAN7430 Signals

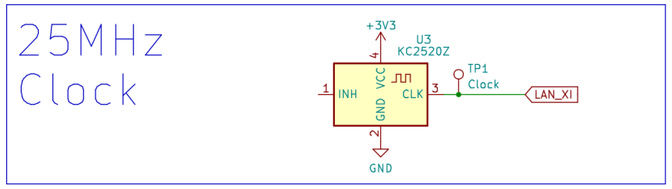

25MHz Clock

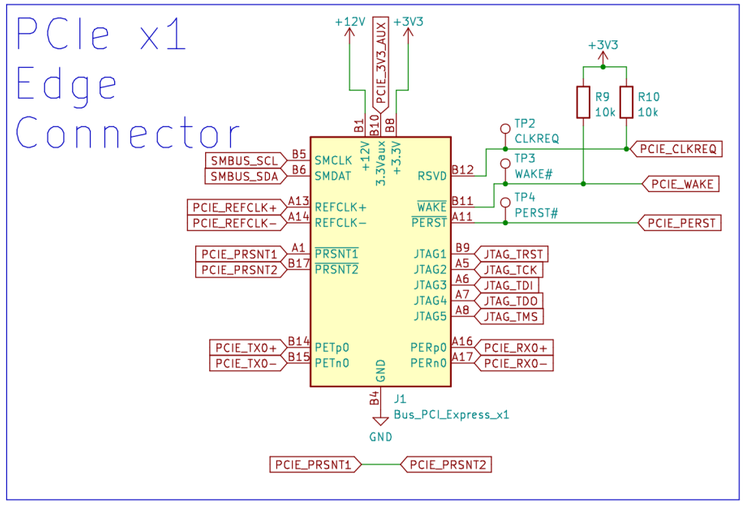

PCIe x1 Edge Connector

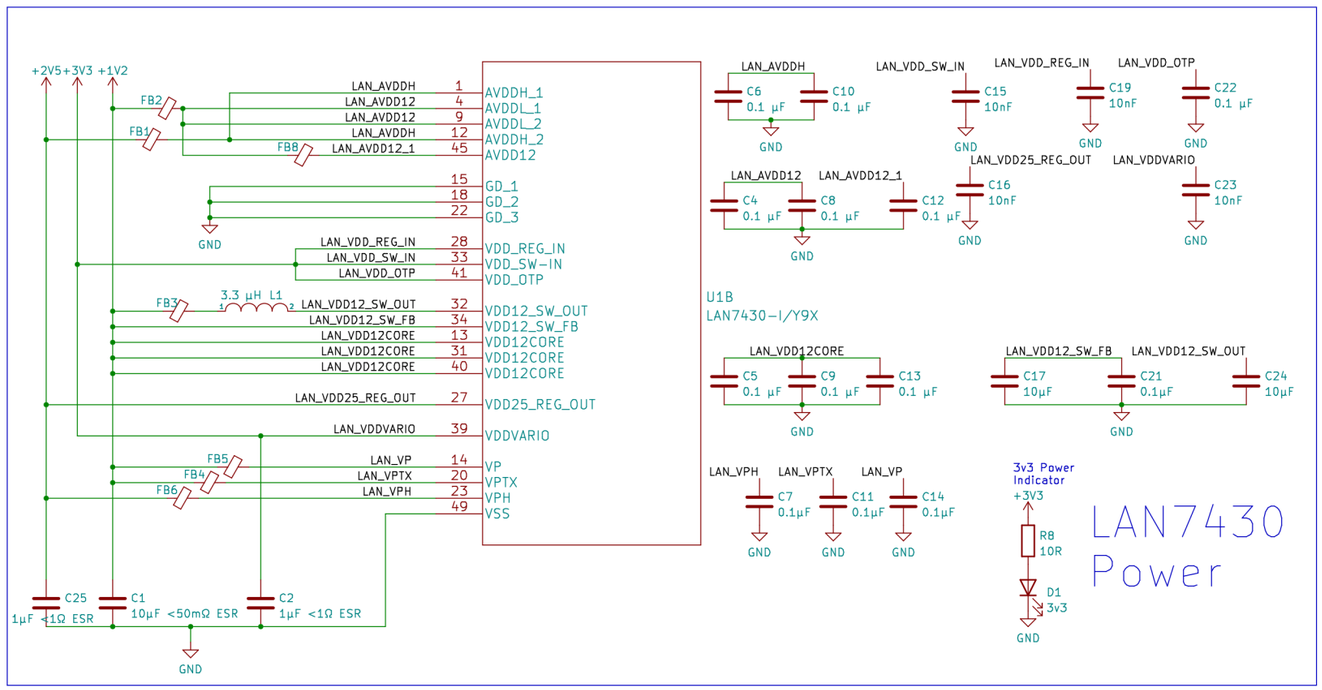

LAN7430 Power

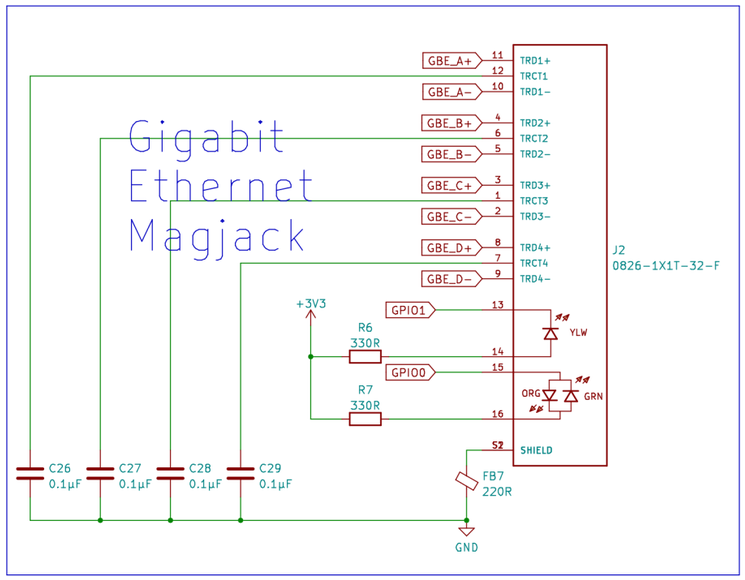

Gigabit Ethernet Magjack