Figure 1. System Auto Power-off Circuit

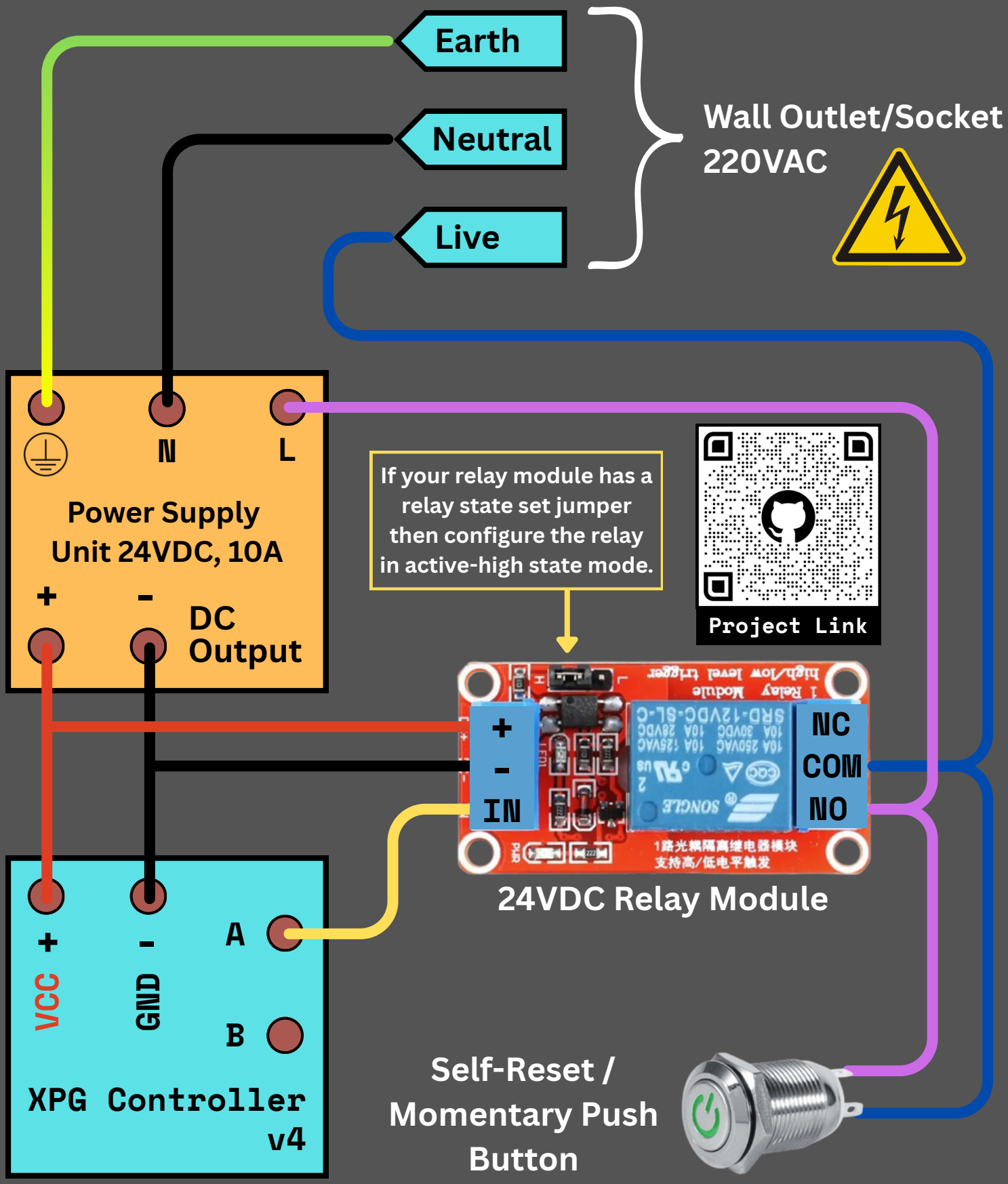

WARNING — Mains AC is hazardous and can cause severe injury or death; never work on a live circuit.

Always disconnect the system from the wall outlet and verify it is de-energized before making any wiring changes or adjustments, and reapply power only after checks are complete. Do not connect the DC supply with reverse polarity; doing so can permanently damage electronic circuits and create a fire risk.

Follow the relay module wiring exactly as shown in this circuit diagram.

Figure 2. Auto Voltage Switching Circuit

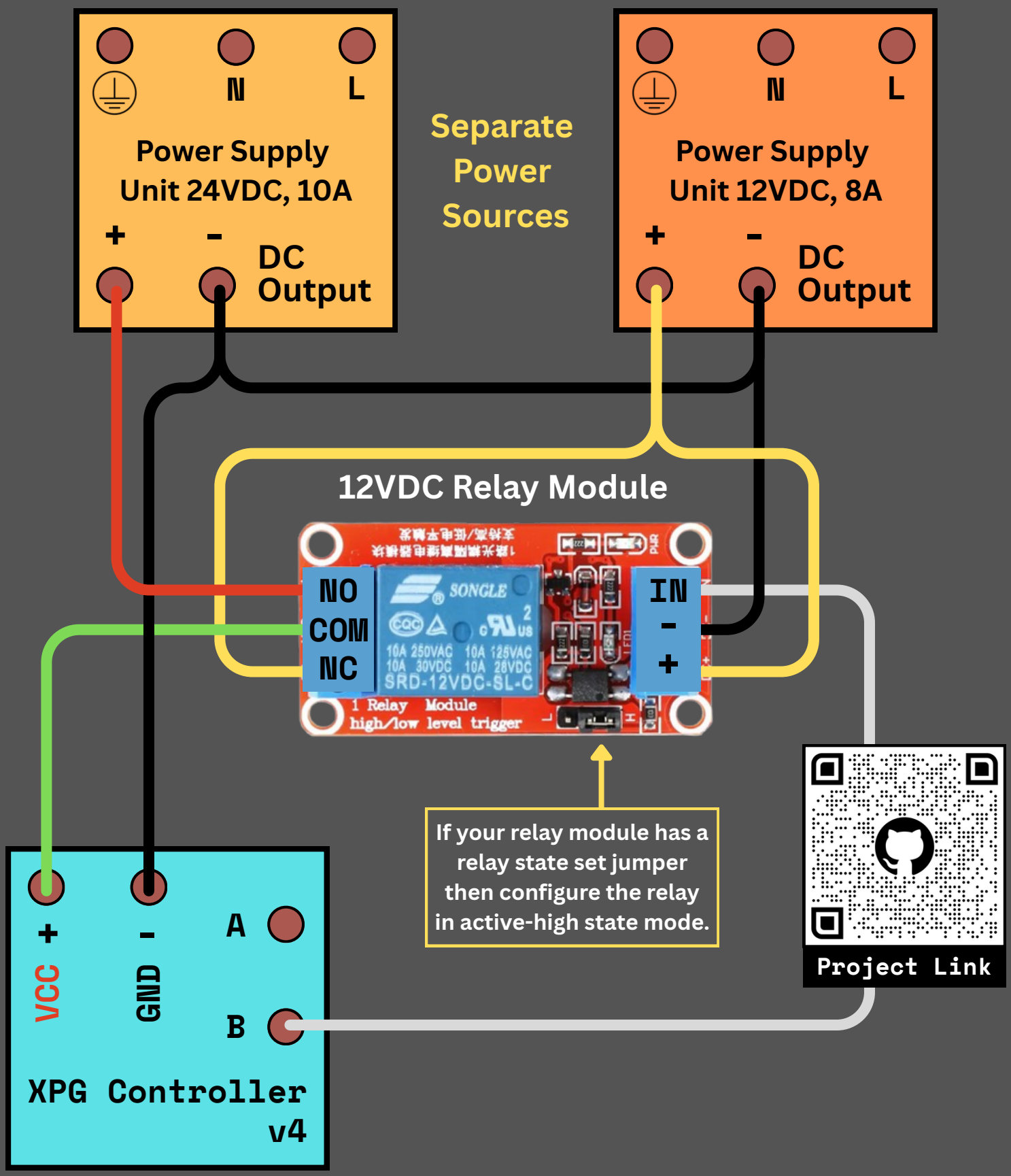

WARNING — Mains AC is hazardous and can cause severe injury or death; never work on a live circuit.

Always disconnect the system from the wall outlet and verify it is de-energized before making any wiring changes or adjustments, and reapply power only after checks are complete. Do not connect the DC supply with reverse polarity; doing so can permanently damage electronic circuits and create a fire risk.

Follow the relay module wiring exactly as shown in this circuit diagram.

Figure 3. Auto Voltage Switching Circuit

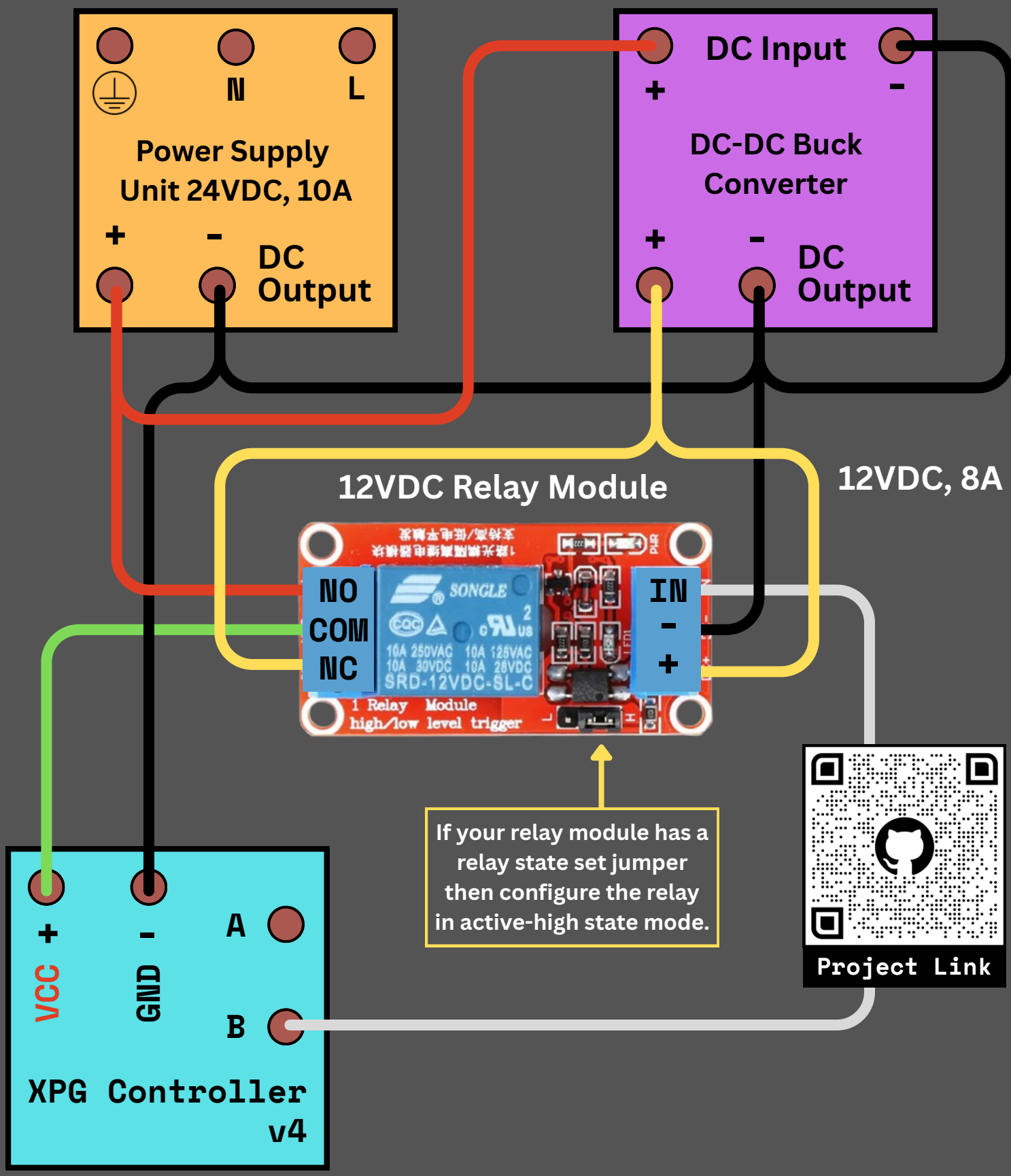

WARNING — Mains AC is hazardous and can cause severe injury or death; never work on a live circuit.

Always disconnect the system from the wall outlet and verify it is de-energized before making any wiring changes or adjustments, and reapply power only after checks are complete. Do not connect the DC supply with reverse polarity; doing so can permanently damage electronic circuits and create a fire risk.

Follow the relay module wiring exactly as shown in this circuit diagram.

Figure 4. System Auto Power-off and Auto Voltage Switching Combined Circuit

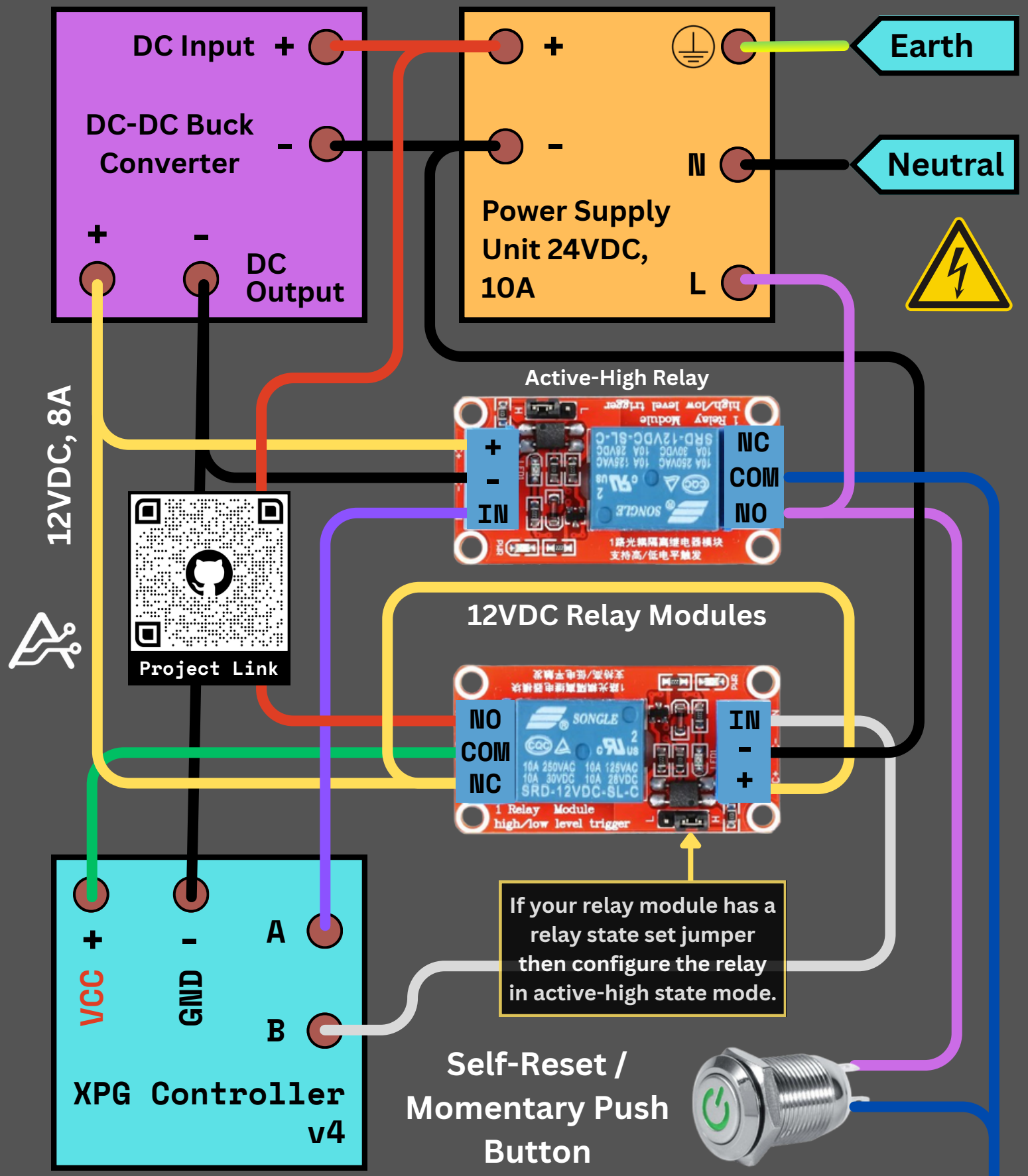

WARNING — Mains AC is hazardous and can cause severe injury or death; never work on a live circuit.

Always disconnect the system from the wall outlet and verify it is de-energized before making any wiring changes or adjustments, and reapply power only after checks are complete. Do not connect the DC supply with reverse polarity; doing so can permanently damage electronic circuits and create a fire risk.

Follow the relay modules wiring exactly as shown in this circuit diagram.