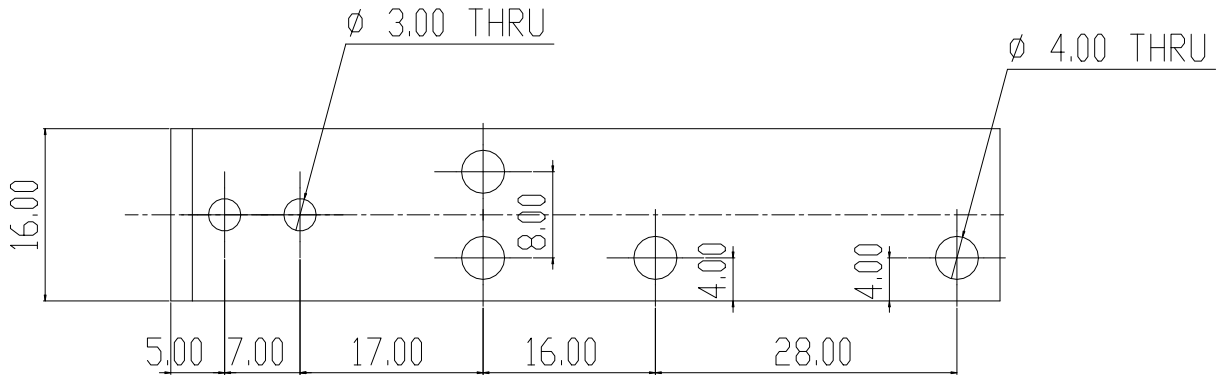

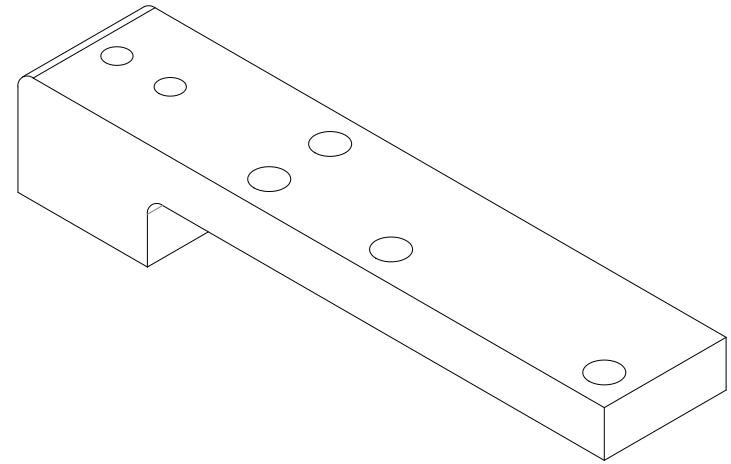

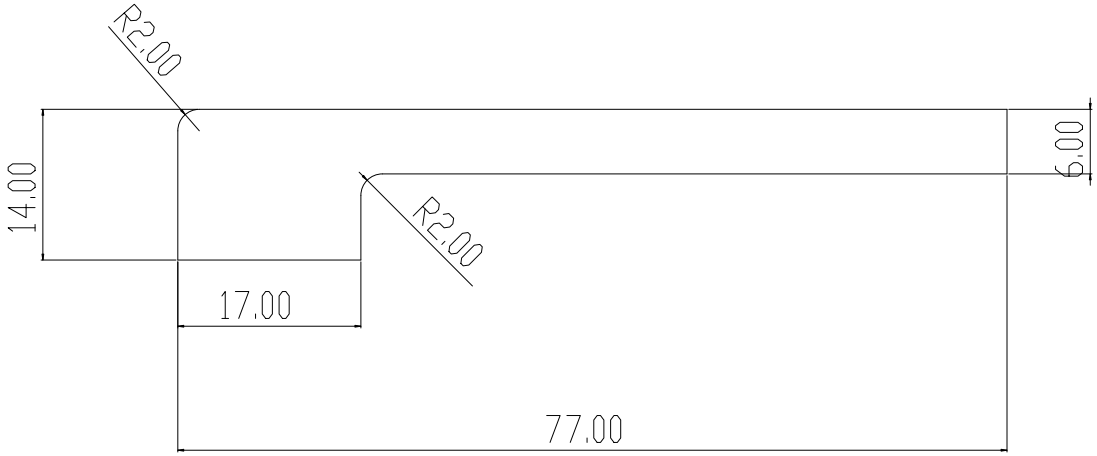

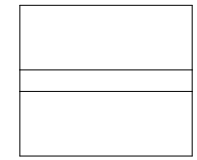

UNLESS OTHERWISE SPECIFIED: DIMENSIONS ARE IN MILLIMETERS SURFACE FINISH: TOLERANCES: LINEAR: ANGULAR:

TITLE:

DO NOT SCALE DRAWING

REVISION:

	NAME	SIGNATURE	DATE
DRAWN			
CHK'D			
APPV'D			
MFG			
Q.A			

MATERIAL:

WEIGHT:

DWG NO. Sandwich_Bottom_Left A0

SCALE:1:1 SHEET 1 OF 1