Experiment No:4

Date of Performance:

Date of Submission:

AIM:-To plot the wave form for Binary Frequency Shift Keying (BFSK) signal using MATLAB for a stream of bits.

THEORY:-

Infrequency-shift keying, the signals transmitted for marks(binary ones) and spaces (binary zeros) are respectively.

$$s_1(t) = A\cos(\omega_1 t + \theta_c), \qquad 0 < t \le T$$
$$s_2(t) = A\cos(\omega_2 t + \theta_c), \qquad 0 < t \le T$$

This is called a **discontinuous phase** FSK system, because the phase of the signal is discontinuous at the switching times. A signal of this form can be generated by the following system.

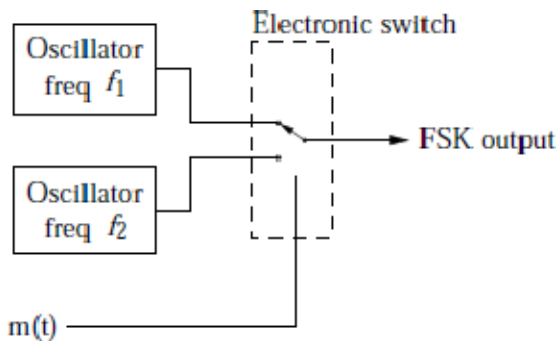

If the bit intervals and the phases of the signals can be determined (usually by the use of a phase-lock loop), then the signal can be decoded by two separate matched filters:

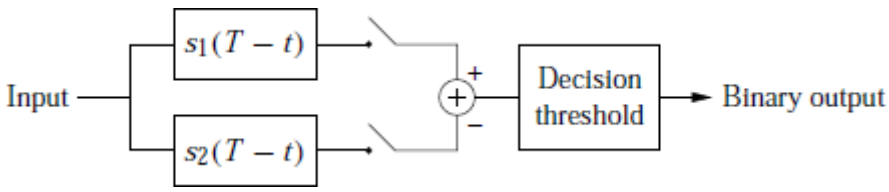

The first filter is matched to the signalS1(t)and the second to S2(t) Under the assumption that the signals are mutually orthogonal, the output of one of the matched filters will be E and the other zero (where E is the energy of the signal). Decoding of the bandpass signal can therefore be achieved by subtracting the outputs of the two filters, and comparing the result to a threshold. If the signal S1(t) is present then the resulting outputwill be +E, and if S2(t) is present it will be –E. Since the noise variance at each filter output is$E$n/2, the noise in the difference signal will be doubled, namely <^{2}=En. Since the overall output variation is 2E, the probability of error is:

$$P_\epsilon = \text{erfc}\left(\frac{2E}{2\sqrt{E\eta}}\right) = \text{erfc}\sqrt{\frac{E}{\eta}}.$$

MATLAB PROGRAM:-

```
clear;
clc;
b=input('EntertheBitstream\n');%b=[0101110]; n =
length(b);
t = 0:.01:n;
x=1:1:(n+1)*100;
fori=1:n
   if(b(i)==0)
      b_p(i)=-1;
   else
      b_p(i)=1;
   end
   for j = i:.1:i+1
      bw(x(i*100:(i+1)*100))=b_p(i);
   end
end
bw=bw(100:end);
wo = 2*(2*pi*t);
W= 1*(2*pi*t);
sinHt=sin(wo+W);
sinLt = sin(wo-W);
st=sin(wo+(bw).*W);
subplot(4,1,1)
plot(t,bw)
gridon;axis([0n-2+2])
subplot(4,1,2)
plot(t,sinHt)
gridon;axis([0n-2+2])
subplot(4,1,3)
plot(t,sinLt)
gridon;axis([0n-2+2])
subplot(4,1,4)
plot(t,st)
gridon;axis([0n-2+2])
Fs=1;
figure%pburg(st,10)
periodogram(st)
```

OBSERVATION:-

Output wave form for the bit stream [0 1 0 0 1 1 10]

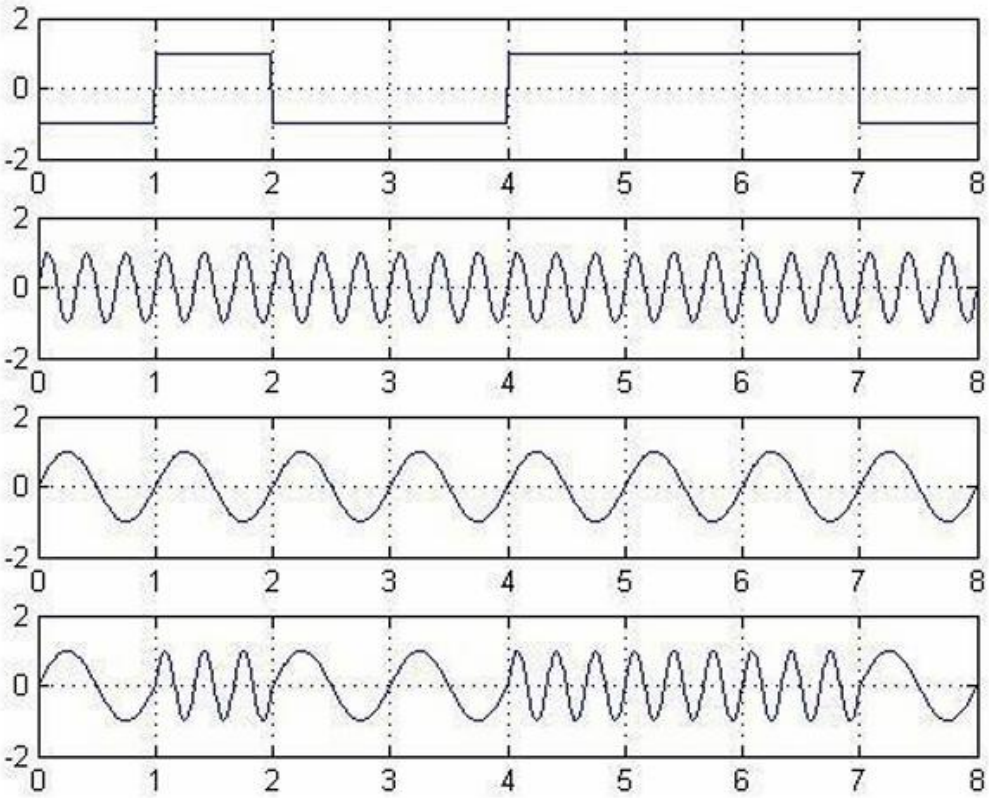

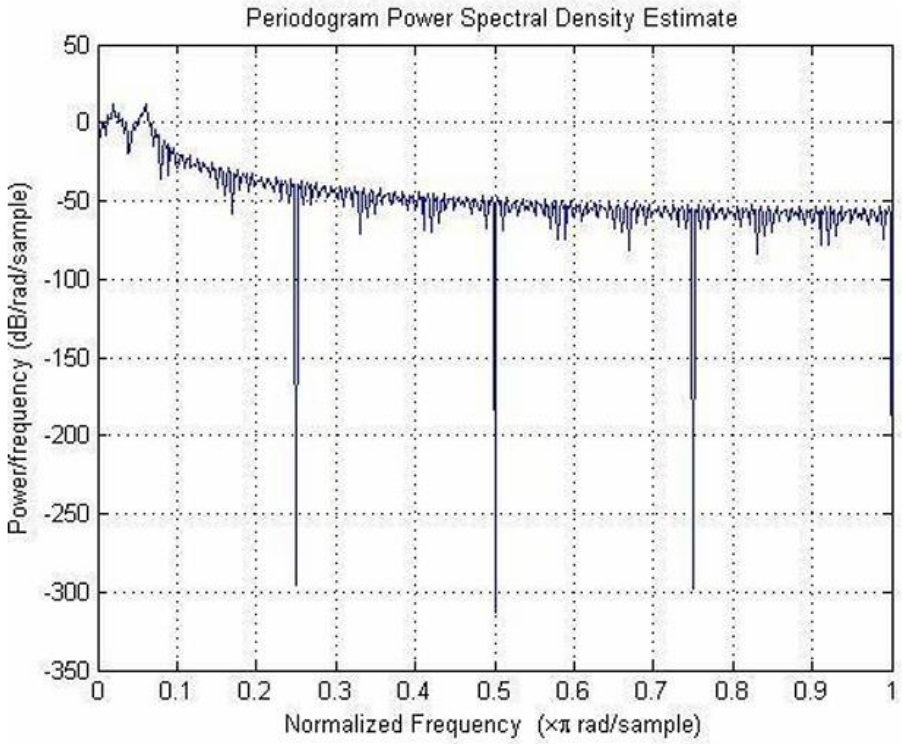

Output wave form for the bit stream [1 0 1 1 0 0 01]

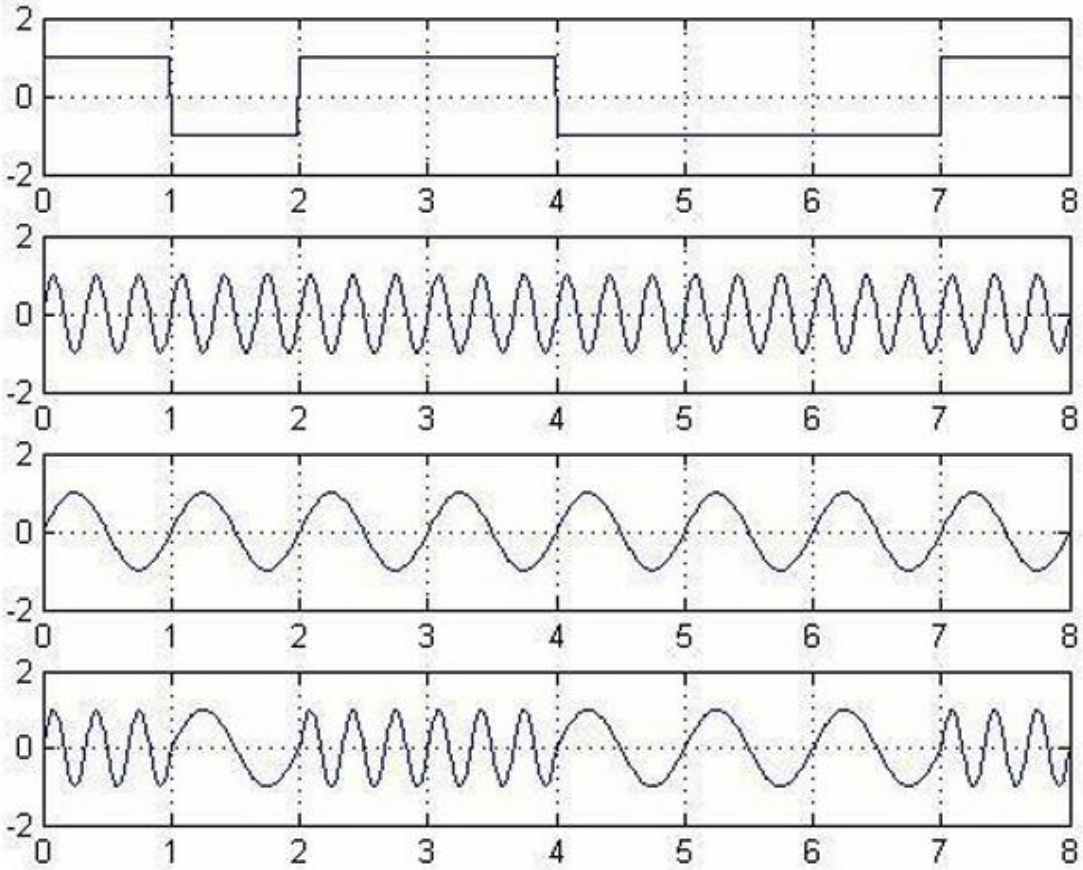

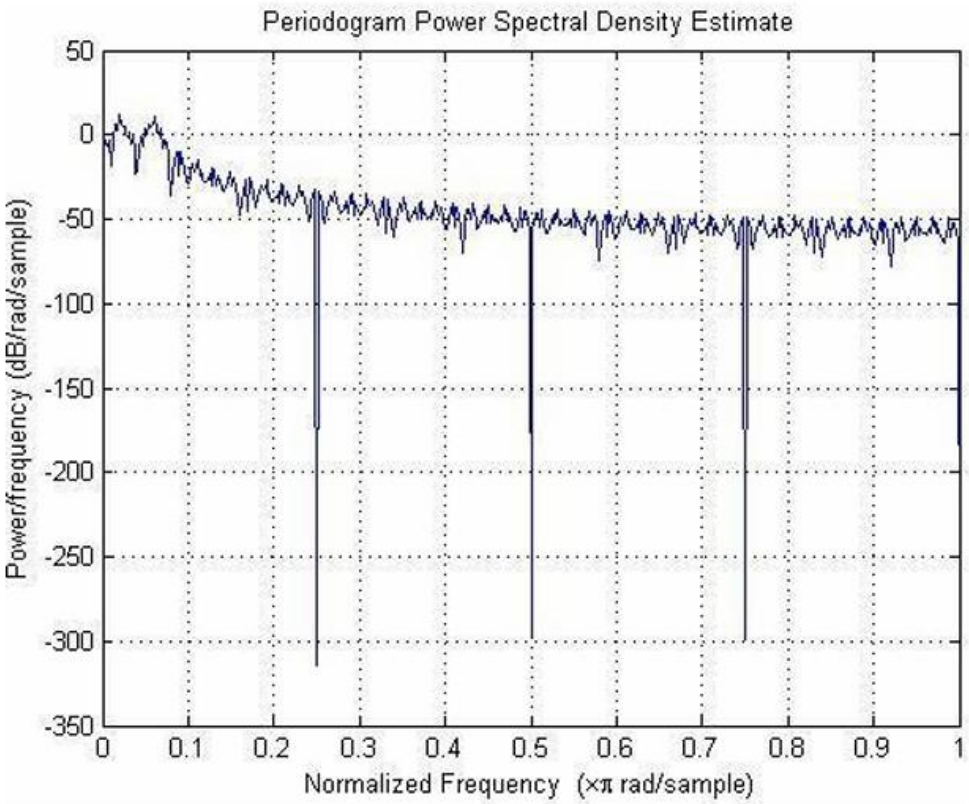

Result: The BFSK signal was successfully generated and plotted in MATLAB for the given bit stream. The waveform showed two distinct frequencies representing binary 1 and 0, while amplitude remained constant. The plotted result confirmed correct Binary Frequency Shift Keying modulation behavior

Signature and Remark:

R1 (4 MARKS)	R2 (4 MARKS)	R3 (4 MARKS)	R4 (3 MARKS)	TOTAL MARKS (15 MARKS)	SIGNATURE