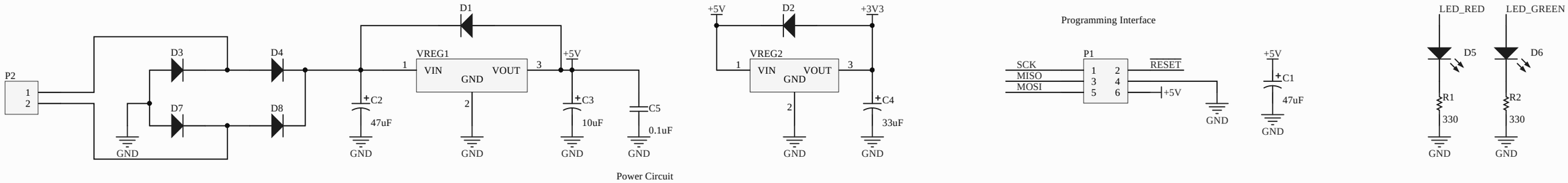

Target Embedded System

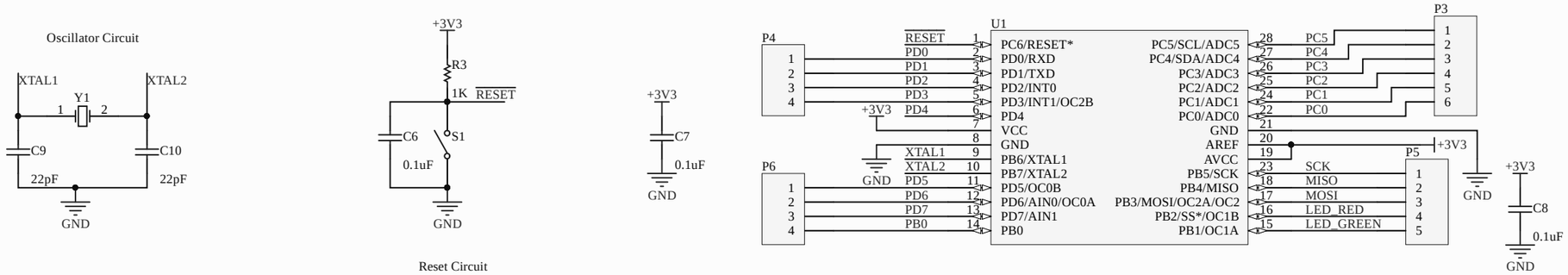

Transmitter Circuit

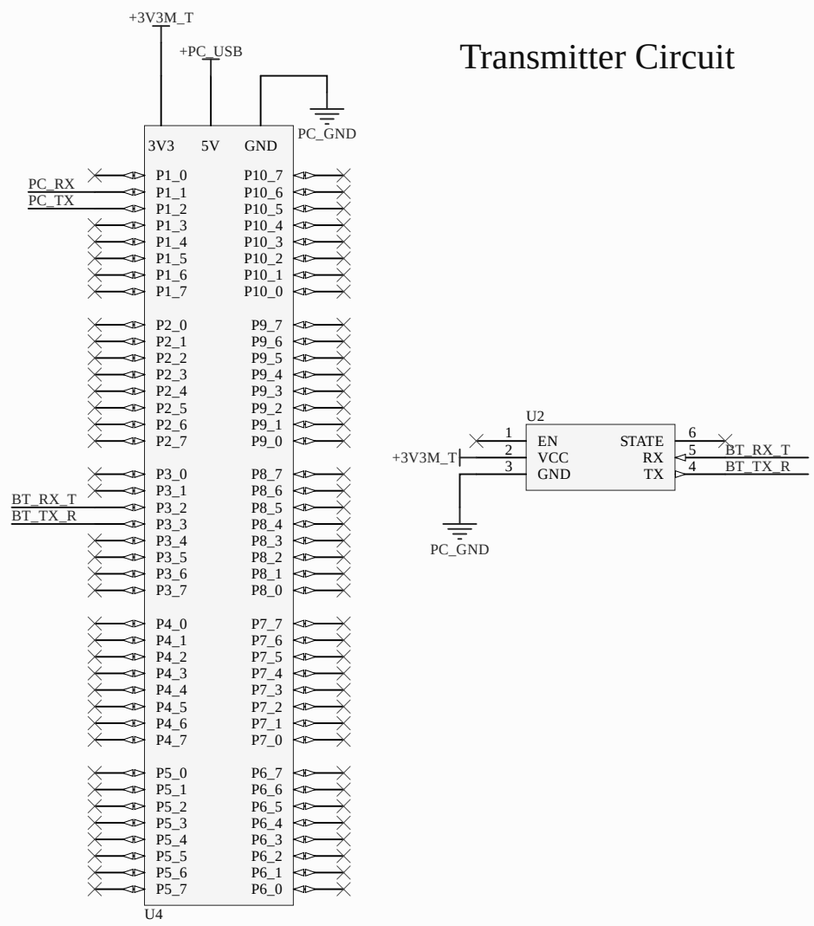

MSP432P401R Launchpad Development Board

Programmer Circuit

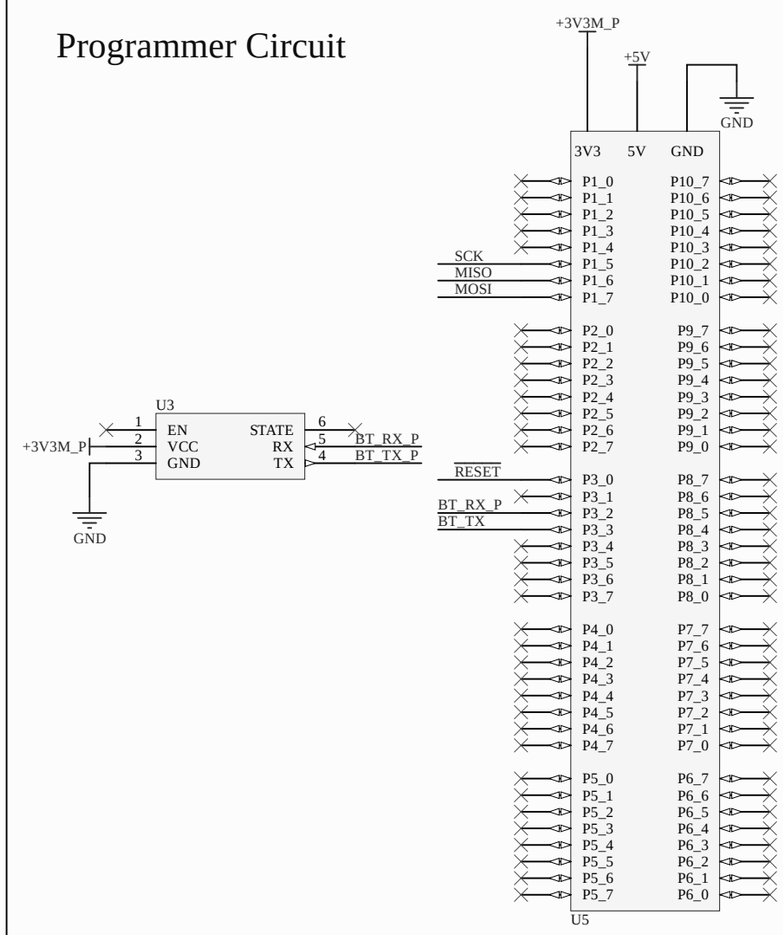

MSP432P401R Launchpad Development Board

Wireless AVR Chip Programmer

Designed and Developed by
Abhijeet Shrivastava
Atharva Nandanwar

Embedded System Design Fall 2019
University of Colorado Boulder

Title		
Size A3	Number	Revision
Date: 12/9/2019	Sheet of	
File: C:\Users\..\esd_project.SchDoc	Drawn By:	