GREAT OUTDOORS CONTEST
PRIZES PROVIDED BY ORU KAYAK
ALITE
Brown Dog Solar
WIN SOME GREAT GEAR FOR YOUR OUTDOOR ADVENTURES!

Arduino - Control DC Motor via Bluetooth by RuiSantos (/member/RuiSantos/)

Download (/id/Arduino-Control-DC-Motor-via-Bluetooth/?download=pdf) (/id/Arduino-Control-DC-Motor-via-Bluetooth/) 4 Steps

+ Collection I Made it! Favorite

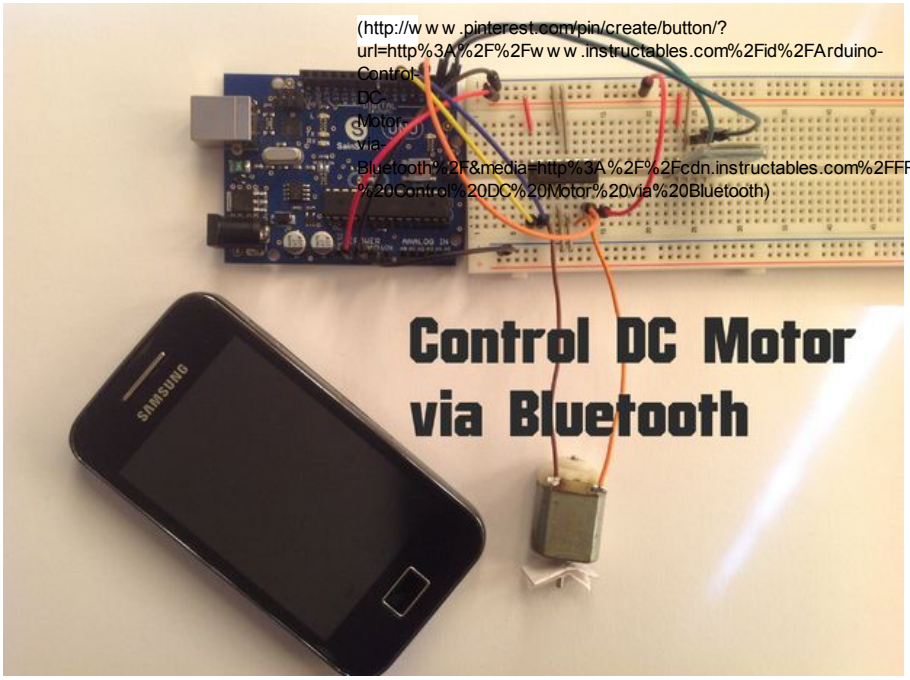

(http://www.pinterest.com/pin/create/button/?url=http%3A%2F%2Fwww.instructables.com%2Fid%2FArduino-Control-DC-Motor-via-Bluetooth%2F&media=http%3A%2F%2Fcdn.instructables.com%2FFRD%2FDTEJ%2FHET1ELSV%2FFRDDTEJHET1ELSV.MEDIUM.jpg&descri%20Control%20DC%20Motor%20via%20Bluetooth)

(http://cdn.instructables.com/FRD/DTEJ/HET1ELSV/FRDDTEJHET1ELSV.LARGE.jpg)

EPILOG CHALLENGE
sponsored by
EPILOG LASER
additional prizes provided by
FactoryeNova
zing
WIN AN EPILOG ZING LASER CUTTER!
VIEW CONTEST

Hi guys,
In this project we will control a DC motor with a smartphone via bluetooth. This project is great to learn more about:
-DC motor
-Interfacing Arduino with your smartphone
-Bluetooth module
-L293D

you can visit my website for more electronic projects, interesting news and tips. (http://randomnerdtutorials.com)
Check this video to see it working

About This Instructable

86,445 views

434 favorites

License: (cc) BY-NC-SA

RuiSantos (/member/RuiSantos/)
Random Nerd Tutorials
(http://randomnerdtutorials.com
(/member/Ru

Follow 247

Hostmight.Com-
Web Hosting
hostmight.com

Remove these ads by **Signing Up** (/account/gopro?sourcea=removeads&nxtPgName=Arduino+-+Control+DC+Motor+via+Bluetooth&nxtPg=/id/Arduino-Control-DC-Motor-via-Bluetooth/)

Step 1: Parts required

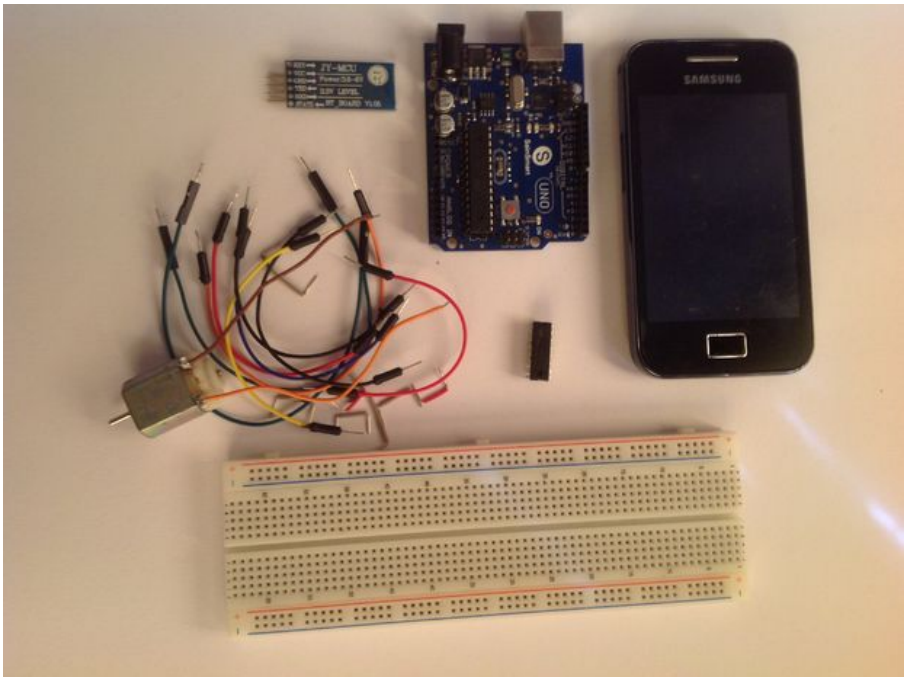

(http://cdn.instructables.com/FBC/T8S4/HDHXNRHX/FBCT8S4HDHXNRHX.LARGE.jpg)

Bio: Arduino Tinkerer. Circuits Designer. Electronics Hobbyist. Blogger and Entrepeneur. I live in Portugal and I'm studying electrical engineering. Feel free to contact me here: http://randomnerdtutorials...read more » (/member/RuiSantos/)

More by RuiSantos

(/id/Create-your-own-Blog-in-5-minutes)

(/id/Arduino-Simple-Memory-Game)

(/id/How-to-Fix-your-Earphones)

Tags:

Arduino (/tag/type-id/category-technology/keyword-arduino/)

L293D IC (/tag/type-id/category-technology/keyword-l293d ic/)

beginner (/tag/type-id/category-technology/keyword-beginner/)

project (/tag/type-id/category-technology/keyword-project/)

tutorial (/tag/type-id/category-technology/keyword-tutorial/)

bluetooth module (/tag/type-id/category-technology/keyword-bluetooth module/)

android (/tag/type-id/category-technology/keyword-android/)

blueterm app (/tag/type-id/category-technology/keyword-blueterm app/)

HC (/tag/type-id/category-technology/keyword-hc/)

05 bluetooth (/tag/type-id/category-technology/keyword-05 bluetooth/)

Related

Control DC Motors with your Smartphone (Perfect for a Robot) (/id/Control-DC-Motors-with-your-

Car Bluetooth (for Arduino) (/id/Car-Bluetooth-for-Arduino/) by UPMH_edu

ArduDroid: A Simple 2-Way Bluetooth-based Android Controller for Arduino (/id/Andruino-A-

Mobile robot controlled using bluetooth

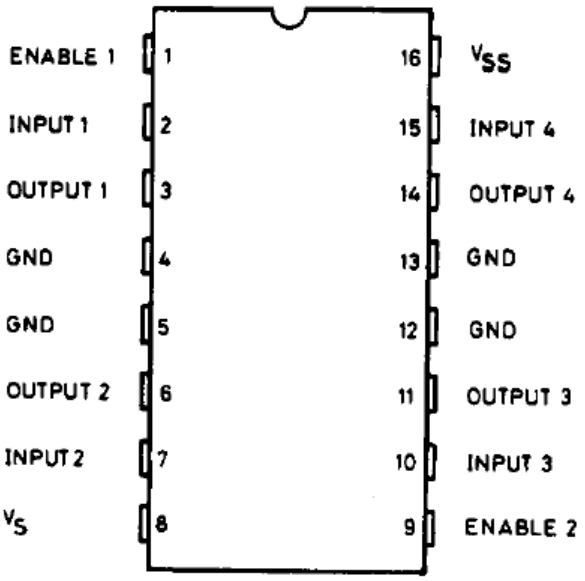

(http://cdn.instructables.com/FS6/6WH9/HD4VNDM5/FS66WH9HD4VNDM5.LARGE.gif)

1x Arduino Uno
1x Bluetooth Module (for example: HC-05)
1x Smartphone (any Android will work)
BlueTerm application
1x L293D IC
1x DC motor
1x Breadboard
Jumper Cables

Step 2: Schematics and common mistakes

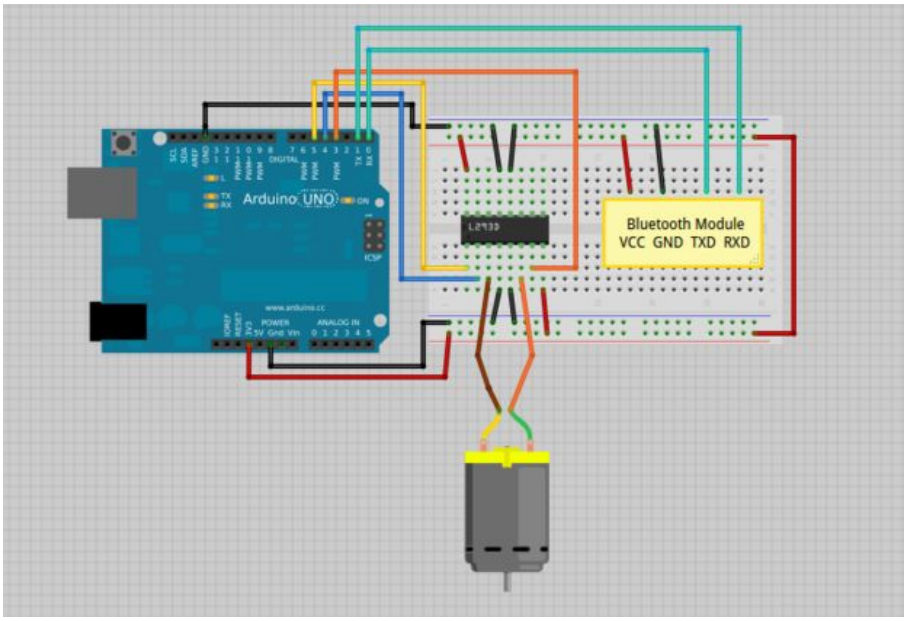

(http://cdn.instructables.com/FLG/UVFV/HD4VGYKU/FLGUVFVHD4VGYKU.LARGE.jpg)

Two common mistakes:
-You need to remove the RX and TX cables when you're uploading the sketch to your Arduino.

(/id/Mobile-robot-

Ship controled by bluetooth. (/id/Ship-controled-by-bluetooth/)
by Jonathan Vera

See More (/tag/type-id/?q=)

-Sometimes people connect the TX from the bluetooth module to the TX of the Arduino… that's wrong and it won't work. Make sure you connect it properly, the TX into RX and the RX into the TX.

Note:
If the HC-05 Bluetooth Module asks for a password, It's '1234'.

Step 3: Arduino Code

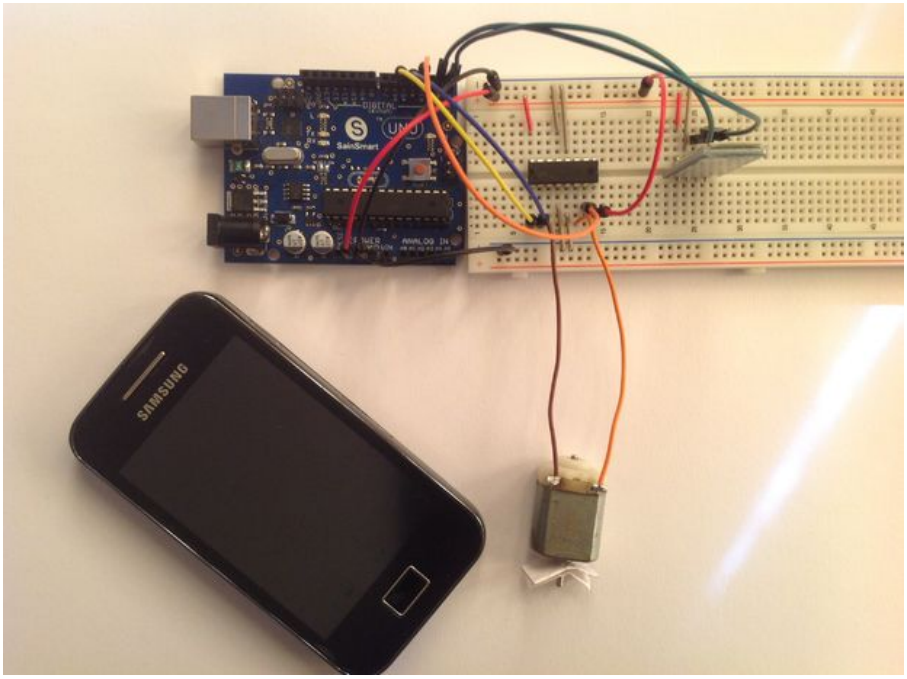

(http://cdn.instructables.com/FD0/5ZHI/HD4VNDM9/FD05ZHIHD4VNDM9.LARGE.jpg)

```
1
2
3
4
5
6
7
8
9
10
11
12
13
14
15
16
17
18
19
20
21
22
23
24
25
```

```
/*
 * created by Rui Santos, http://randomnerdtutorials.wordpress.
 * Control DC motor with Smartphone via bluetooth
 * 2013
 */
int motorPin1 = 3; // pin 2 on L293D IC
int motorPin2 = 4; // pin 7 on L293D IC
int enablePin = 5; // pin 1 on L293D IC
int state;
int flag=0;        //makes sure that the serial only prints onc
ate

void setup() {
    // sets the pins as outputs:
    pinMode(motorPin1, OUTPUT);
    pinMode(motorPin2, OUTPUT);
    pinMode(enablePin, OUTPUT);
    // sets enablePin high so that motor can turn on:
    digitalWrite(enablePin, HIGH);
    // initialize serial communication at 9600 bits per second:
    Serial.begin(9600);
}

void loop() {
```

gistfile1.c view raw (https://gist.github.com/ruisantos16/5023583/raw/gistfile1.c) (https://gist.github.com/ruisantos16/5023583#file-gistfile1-c) hosted with ♥ by GitHub (https://github.com)

For the android communication with our bluetooth module I've used the BlueTerm app, It's completely free, so you just need to go to "Play store" and download it. Then you just need to connect your smarthphone with the bluetooth module. Remember to remove the TX and RX cables. (you can see in youtube video below how that's done).

Step 4: Final Product

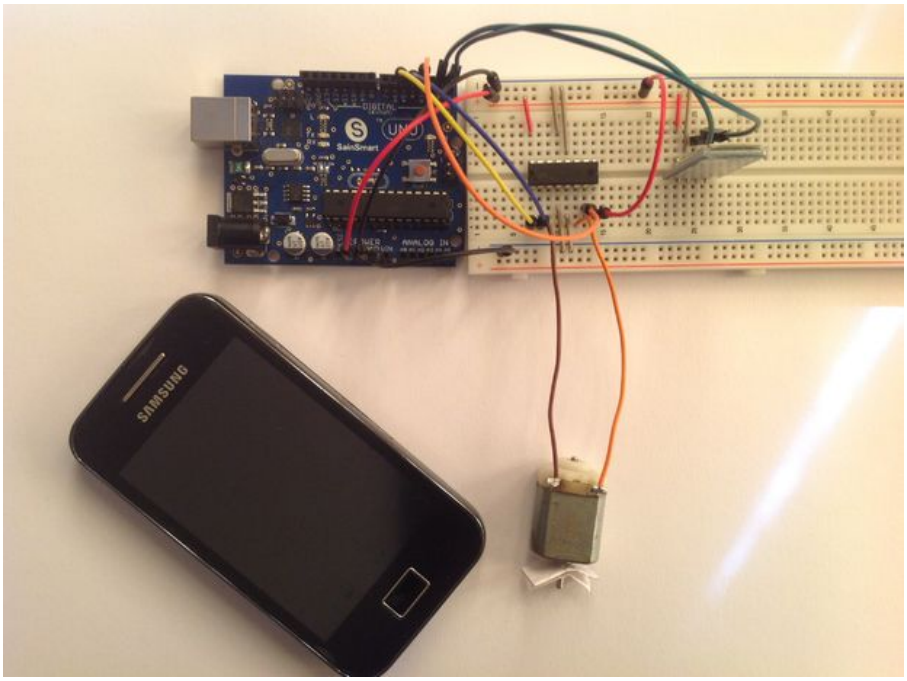

(http://cdn.instructables.com/FD0/5ZHI/HD4VNDM9/FD05ZHIHD4VNDM9.LARGE.jpg)

I've only set 3 commands to control the DC motor:

'0′ – Turns off the DC motor
'1′ – DC motor rotates to right
'2′ – DC motor rotates to left

Check this video to see the circuit in action!
you can visit my website for more electronic projects, interesting news and tips:
(http://randomnerdtutorials.com/)

Make Comment

gsandhu2 (/member/gsandhu2/) 1 month ago Reply (CC1O12YHWU4QIGD)

(/member/gsandhu2/)

I'm working on a project which is about making a rescue robot . I have struggling with it for 4 months and now all the mechanical works had been done . but I'm facing difficulty in make the robot to work with rf module can u plzz help me…

I want make transmitter and receiver that can control the motion…I mean that receiver should have control 8 dc gear motor and each dc
motor should have a forward and backward botton to control the motion …… can u
kindly help me with this project ….if u can make the circuit board diagram for the PCB ….or any other suggestion plz reply……mail me at "sunny1995gagan@gmail.com"

Sheikh Zabi (/member/Sheikh+Zabi/) 2 months ago Reply (CX4Q75THW4OIVB4)

(/member/Sheikh+Zabi/)

I have a project - Bluetooth data acquisition system using arduino , I will be receiving data on my android phone, so if I could know the android coding part it really would be helpful.

hustlervanz (/member/hustlervanz/) 5 months ago Reply (CSEECHIHSBSLS75)

can i use L293NE IC than L293D IC?
(/member/hustlervanz/)

kag432 (/member/kag432/) hustlervanz 4 months ago Reply (C6V79JGHTVMQBXB)

(/member/kag432/)

The NE is just the package so there is a L293NE and a L293DNE, but the difference is that the L293DNE has flyback diodes built in while the L293NE does not and they need to be added externally as on page 2 of the datasheet:

http://www.ti.com/lit/ds/symlink/l

jacpac (/member/jacpac/) 5 months ago Reply (C2WG0D5HSRZMKU3)

can i use 2 motors? and how?
(/member/jacpac/)

jacpac (/member/jacpac/) 5 months ago Reply (C3VY66ZHSRZMKPR)

can i use my nano to create this project
(/member/jacpac/)

rockfellerphilipnittala (/member/rockfellerphilipnittala/) 5 months ago Reply (CR63WR3HSNFYNT7)

i need ur .aia file for android
(/member/rockfellerphilipnittala/)

ongara_01 (/member/ongara_01/) 5 months ago Reply (C1ZV37JHS8FU6I1)

can help me bot ths dc motor; minebea 17PM-J. m need the spect
(/member/ongara_01/)

famsinyi (/member/famsinyi/) 5 months ago Reply (C1RV8IEHRPNA0V8)

(/member/famsinyi/)

Hi, the hc 05 (slave module) I purchased cannot be detected by my android. I think the connection is straight forward, I suspect the module I bought doesn't work, can u point me to any store to buy one that you used?

áde marcos serrano (/member/%C3%A1de+marcos+serrano/) 7 months ago Reply (CX0RHJZHQB1H66R)

(/member/%C3%A1de+marcos+serrano/)

Hi!

Thanks for the code and all the instructions! Good sharing.

I have a problem as the bluetooth module I am using is a different one, in my case it is LCBTCY6, but unfortunately it is not working. Do you have any clue about why might it be? Through the serial monitor works perfectly.

Thanks in advance!

RuiSantos (/member/RuiSantos/) (author) áde marcos serrano 7 months ago Reply (CETWAE2HQC1L47F)

(/member/RuiSantos/)

Thanks Áde.

If it's working via serial monitor means your circuit is correct!

About your bluetooth module... I'm not sure how it works...as I've never used one. Try to take a look at both datasheets.

See If my bluetooth works like yours.. as I don't have the time do that myself.

Your module might need some kind of configuration before you use it. because I'm sure both modules can communicate via serial port with the Arduino.

---

namrataqwer (/member/namrataqwer/) 7 months ago Reply (CK655CSHPT91WAH)

(/member/namrataqwer/)

hey after instaliing blueterm app. do we need to do anythng in that app.. means for setting commands n all.. plz reply fast...

RuiSantos (/member/RuiSantos/) (author) namrataqwer 7 months ago Reply (CP5P5AQHQ0HSAWD)

(/member/RuiSantos/)

You don't need to configure anything... I think, but you can change if you like... for a better display. take a look at all the setting and change the way

you prefer.
Sorry for taking so long to answer I've only saw you question today.

cgoh1 (/member/cgoh1/) 8 months ago Reply (C0N6XSZHO7XCK1V)

(/member/cgoh1/) Hi, we have used the given code above. However, the motor only seems to turn left but not turn right. do you know what is the problem occuring?

nileshs (/member/nileshs/) cgoh1 7 months ago Reply (CAALXC4HQ0IQML8)

(/member/nileshs/) In which software this code i have to write please sir tell me.

RuiSantos (/member/RuiSantos/) (author) nileshs 7 months ago Reply (C0ZFJE1HQ0HSAVX)

(/member/RuiSantos/) The code is to be uploaded through the Arduino IDE into the Arduino board :)

prana3 (/member/prana3/) 9 months ago Reply (CIJZHRIHN6BUHJF)

(/member/prana3/) Hey brother ...The Blue term app is not available on play store //.... So can anyone plz suggest any other app to control bluetooth

RuiSantos (/member/RuiSantos/) (author) prana3 9 months ago Reply (C2TAJGYHN82K6C4)

(/member/RuiSantos/) I didn't knew... Instead of using blueterm, please take a look at my new tutorial here: http://randomnerdtutorials control-2-dc-motors-via-bluetooth/

I've developed this app with Mit App inventor... so you can control your arduino via bluetooth. Take a look it's much better then blueterm and it looks nicer.

I hope this helps, leave a comment on my website if you have any questions.
All the best,
Rui Santos

Lindermann95 (/member/Lindermann95/) 10 months ago Reply (C1GCRFRHMMF947L)

(/member/Lindermann95/) Hi!
i found an app for my iPhone 5, "nBlueTerm"
it will work? or i need an android phone?
Thanks! :D

nc088 (/member/nc088/) 10 months ago Reply (CZU14T0HMMF1GL6)

(/member/nc088/)

Why do you need to connect the bluetooth module after you connect with bluetooth. is there any way this can work without having to make the connection after you connet by bluetooth?

1234rcadj (/member/1234rcadj/) 10 months ago Reply (C5PI90IHMC543XP)

(/member/1234rcadj/)

how could i download the android apps so that i can continue my study? please help

---

RuiSantos (/member/RuiSantos/) (author) 1234rcadj 10 months ago Reply (CEBSJU9HMEXSGSY)

(/member/RuiSantos/)

Id didn't developed this android app...
Blueterm app is not mine... sorry,
But I have a android app that you can download at my website...

there's the link: http://randomnerdtutoria control-2-dc-motors-via-bluetooth/

---

temotion (/member/temotion/) 10 months ago Reply (C5KO94CHLZRUVDL)

(/member/temotion/)

whether I could ask for a tutorial to make this tool?

---

rlarios (/member/rlarios/) 10 months ago Reply (C76NDBNHLR2BSK5)

(/member/rlarios/)

Hi there Rui,

I am currently working on an Arduino project and I noticed I can't get my code displayed the way you did on this project.

What software tools do you use to do this?

Thanks in advance, pal and keep up the good work!

rlarios

---

shivamundisputed (/member/shivamundisputed/) 11 months ago Reply (CMJ5K9RHKZ9IOJA)

(/member/shivamundisputed/)

hey i just used bluetooh hc 05 and followed the same schematics but it didnt work

---

RuiSantos (/member/RuiSantos/) (author) shivamundisputed 11 months ago Reply (CGI275KHKZ9LO6Y)

(/member/RuiSantos/)

I'm sure my project is working 100%...
because more than 50 people messaged me saying it was working...
Please make sure you check the most common mistakes...
see if you're TX is connect to RX and the RX is connected to the

TX.
Check if you're IC is on
the correct way.
If it's still not working.
before even connect
the bluetooth module
check if your circuit is
working by sending
those numbers '0' '1'
and '2' through the
serial monitor... if it's
working like that it might
be a problem with your
bluetooth module

good luck!
thanks so much for
trying my project let me
know if you have more
questions.
the best way to contact
me is by leaving a
comment on my
website.
(http://randomnerdtutoria

us241098 (/member/us241098/) 1 year ago Reply (CBXHWHBHHI55Y9V)

(/member/us241098/) Can u plzz tell me what is its range ..... I want to make a car using your idea any suggestions plzz

RuiSantos (/member/RuiSantos/) (author) us241098 1 year ago Reply (CVTLN3RHHJOKP2H)

(/member/RuiSantos/) The range is about 5-6 meters with these bluetooth module, I already reached 10 meters and It worked just fine, but sometimes with more than 6 meters you will get disconnected. If you want more range, I recommend you to buy a better bluetooth module I guess
Good luck with your projec I look forward to hear more about that :)

vek11 (/member/vek11/) RuiSantos 11 months ago Reply (CK5NI1OHKM8MREM)

What are your recommendations for a "better" bluetooth module?
(/member/vek11/)

makiemo (/member/makiemo/) 1 year ago Reply (CWYA02YHIPIQVK6)

(/member/makiemo/) hei there.. can i just connect the arduino with my smart phone without using the blue term?? thanks alot

RuiSantos (/member/RuiSantos/) (author) makiemo 1 year ago Reply (CR8XIWPHIXCIC8T)

(/member/RuiSantos/) yes you can connect but then you can't do anything... because the Bluetooth itself of your smartphone can't

send any information for your arduino. you need an app for that. That's why I'm using blueterm

---

supsuppl88 (/member/supsuppl88/) 1 year ago Reply (C8CLM6GHI3TYZPW)

hii
can you tell me the sketch required to set JY-mcu to pairable mode and after i connect it to my smart phone the arduino read what i send in blueterm

(/member/supsuppl88/)

RuiSantos (/member/RuiSantos/) (author) supsuppl88 1 year ago Reply (CGGCCLFHIF073B7)

Actually i don't know exactly how's the skecth, because mine didn't needed... :S

(/member/RuiSantos/)

---

supsuppl88 (/member/supsuppl88/) 1 year ago Reply (CJUE9I2HHS9MAR5)

when i plug the hc05 to uno and try to pair it with my mobile ,it doesnot appear any device availble so how i configure the bluetooth hco5

(/member/supsuppl88/)

RuiSantos (/member/RuiSantos/) (author) supsuppl88 1 year ago Reply (CXH8RDPHI3U0K80)

that's really weird, If it doesn't appear you must be doing some connection wrong.
Try to check all the wires again.
If it keeps not appearing try with another smartphone...

(/member/RuiSantos/)

---

swadib silla (/member/swadib+silla/) 1 year ago Reply (CEZL8FVHHS9A072)

how much did the arduino cost??

(/member/swadib+silla/)

RuiSantos (/member/RuiSantos/) (author) swadib silla 1 year ago Reply (C4CPT4RHI3U0K7A)

But usually an original arduino it's a bit more expensive $30 for just an Arduino Uno,
But you can buy a cheap clone for $20 that works just the same :)

(/member/RuiSantos/)

RuiSantos (/member/RuiSantos/) (author) swadib silla 1 year ago Reply (CQRTLG5HI3U0K6Z)

http://randomnerdtutorials.co you can find a kit on amazon, for $25 it includes some parts and a breadboard .
Check my website for more information :)

(/member/RuiSantos/)

---

camvo (/member/camvo/) 1 year ago Reply (C5EGI7AHHJOKRK4)

I used the Bluetooth Mate - Silver RN-42 bluetooth module.
See my post of 12th MAy

(/member/camvo/)

I reached 20m

RuiSantos (/member/RuiSantos/) (author) camvo 1 year ago Reply (CMPMKTBHI3U0K1D)

nice that's really good!

(/member/RuiSantos/)

1-40 of 73 Next » (http://www.instructables.com/id/Arduino-Control-DC-Motor-via-Bluetooth/?&sort=ACTIVE&limit=40&offset=40#DISCUSS)

Make Comment

© 2014 Autodesk, Inc.

Go Pro Today » (/account/gopro?sourcea=footer)

We're Hiring! » (/community/Positions-available-at-Instructables/)