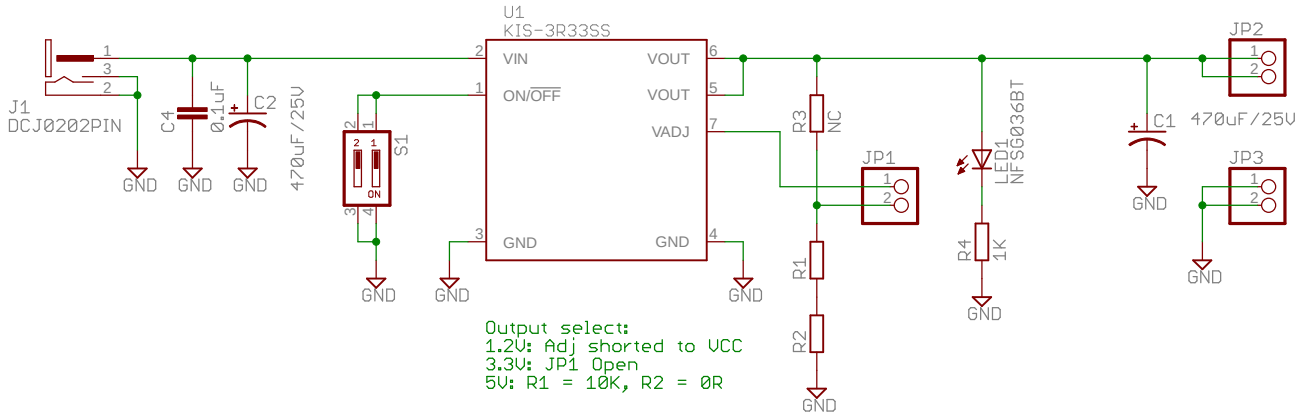

TITLE: KIS-3R33	
Document Number:	REV:
Date: not saved!	Sheet: 1/1