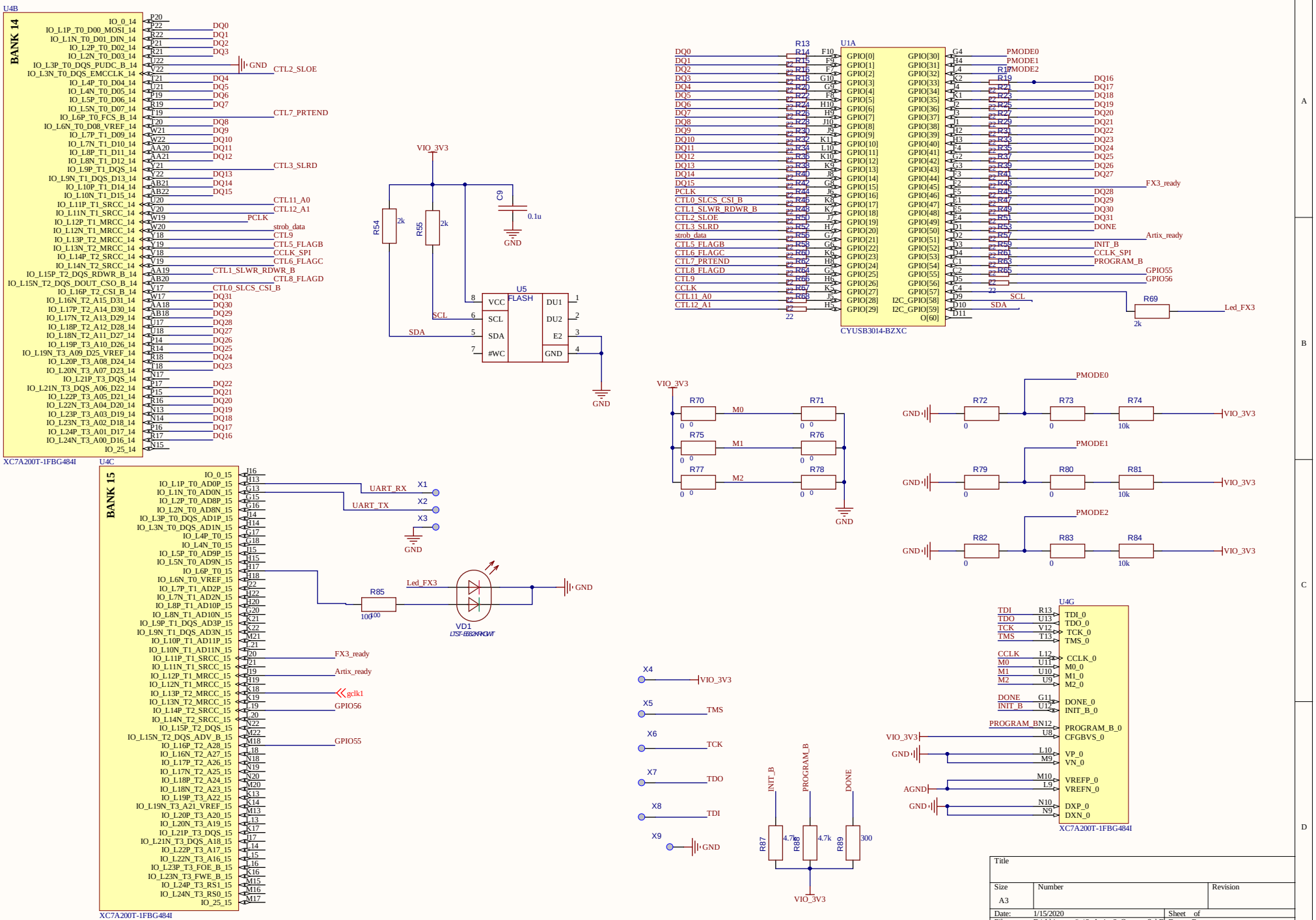
U4B
BANK 14
IO_0_14 P20
IO_L1P_T0_D00_MOSI_14 P22 DQ0
IO_L1N_T0_D01_DIN_14 R22 DQ1
IO_L2P_T0_D02_14 P21 DQ2
IO_L2N_T0_D03_14 R21 DQ3
IO_L3P_T0_DQS_PUDC_B_14 U22 GND
IO_L3N_T0_DQS_EMCCLK_14 V22 CTL2_SLOE
IO_L4P_T0_D04_14 T21 DQ4
IO_L4N_T0_D05_14 U21 DQ5
IO_L5P_T0_D06_14 P19 DQ6
IO_L5N_T0_D07_14 R19 DQ7
IO_L6P_T0_FCS_B_14 T19 CTL7_PRTEND
IO_L6N_T0_D08_VREF_14 T20 DQ8
IO_L7P_T1_D09_14 W21 DQ9
IO_L7N_T1_D10_14 W22 DQ10
IO_L8P_T1_D11_14 AA20 DQ11
IO_L8N_T1_D12_14 AA21 DQ12
IO_L9P_T1_DQS_14 Y21 CTL3_SLRD
IO_L9N_T1_DQS_D13_14 Y22 DQ13
IO_L10P_T1_D14_14 AB21 DQ14
IO_L10N_T1_D15_14 AB22 DQ15
IO_L11P_T1_SRCC_14 U20 CTL11_A0
IO_L11N_T1_SRCC_14 V20 CTL12_A1
IO_L12P_T1_MRCC_14 W19 PCLK
IO_L12N_T1_MRCC_14 W20 strob_data
IO_L13P_T2_MRCC_14 Y18 CTL9
IO_L13N_T2_MRCC_14 Y19 CTL5_FLAGB
IO_L14P_T2_SRCC_14 V18 CCLK_SPI
IO_L14N_T2_SRCC_14 V19 CTL6_FLAGC
IO_L15P_T2_DQS_RDWR_B_14 AA19 CTL1_SLWR_RDWR_B
IO_L15N_T2_DQS_DOUT_CSO_B_14 AB20 CTL8_FLAGD
IO_L16P_T2_CSI_B_14 V17 CTL0_SLCS_CSI_B
IO_L16N_T2_A15_D31_14 W17 DQ31
IO_L17P_T2_A14_D30_14 AA18 DQ30
IO_L17N_T2_A13_D29_14 AB18 DQ29
IO_L18P_T2_A12_D28_14 U17 DQ28
IO_L18N_T2_A11_D27_14 U18 DQ27
IO_L19P_T3_A10_D26_14 P14 DQ26
IO_L19N_T3_A09_D25_VREF_14 R14 DQ25
IO_L20P_T3_A08_D24_14 R18 DQ24
IO_L20N_T3_A07_D23_14 T18 DQ23
IO_L21P_T3_DQS_14 N17
IO_L21N_T3_DQS_A06_D22_14 P17 DQ22
IO_L22P_T3_A05_D21_14 P15 DQ21
IO_L22N_T3_A04_D20_14 R16 DQ20
IO_L23P_T3_A03_D19_14 N13 DQ19
IO_L23N_T3_A02_D18_14 N14 DQ18
IO_L24P_T3_A01_D17_14 P16 DQ17
IO_L24N_T3_A00_D16_14 R17 DQ16
IO_25_14 N15
XC7A200T-1FBG484I
VIO_3V3
R54 2k
R55 2k
C9 0.1u
GND
U5 FLASH
VCC
SCL
SDA
#WC
DU1
DU2
E2
GND
SCL
SDA
U4C
BANK 15
IO_0_15 H6
IO_L1P_T0_AD0P_15 H13
IO_L1N_T0_AD0N_15 G13
IO_L2P_T0_AD8P_15 G15
IO_L2N_T0_AD8N_15 G16
IO_L3P_T0_DQS_AD1P_15 J14
IO_L3N_T0_DQS_AD1N_15 H14
IO_L4P_T0_15 G17
IO_L4N_T0_15 G18
IO_L5P_T0_AD9P_15 J15
IO_L5N_T0_AD9N_15 H15
IO_L6P_T0_15 H17
IO_L6N_T0_VREF_15 H18
IO_L7P_T1_AD2P_15 J22
IO_L7N_T1_AD2N_15 H22
IO_L8P_T1_AD10P_15 J20
IO_L8N_T1_AD10N_15 G20
IO_L9P_T1_DQS_AD3P_15 K21
IO_L9N_T1_DQS_AD3N_15 K22
IO_L10P_T1_AD11P_15 M21
IO_L10N_T1_AD11N_15 L21
IO_L11P_T1_SRCC_15 J20 FX3_ready
IO_L11N_T1_SRCC_15 J21
IO_L12P_T1_MRCC_15 J19 Artix_ready
IO_L12N_T1_MRCC_15 H19
IO_L13P_T2_MRCC_15 K18 gclk1
IO_L13N_T2_MRCC_15 K19
IO_L14P_T2_SRCC_15 L19 GPIO56
IO_L14N_T2_SRCC_15 L20
IO_L15P_T2_DQS_15 N22
IO_L15N_T2_DQS_ADV_B_15 M22
IO_L16P_T2_A28_15 M18 GPIO55
IO_L16N_T2_A27_15 L18
IO_L17P_T2_A26_15 N18
IO_L17N_T2_A25_15 N19
IO_L18P_T2_A24_15 N20
IO_L18N_T2_A23_15 M20
IO_L19P_T3_A22_15 K13
IO_L19N_T3_A21_VREF_15 K14
IO_L20P_T3_A20_15 M13
IO_L20N_T3_A19_15 L13
IO_L21P_T3_DQS_15 K17
IO_L21N_T3_DQS_A18_15 J17
IO_L22P_T3_A17_15 L14
IO_L22N_T3_A16_15 L15
IO_L23P_T3_FOE_B_15 L16
IO_L23N_T3_FWE_B_15 K16
IO_L24P_T3_RS1_15 M15
IO_L24N_T3_RS0_15 M16
IO_25_15 M17
XC7A200T-1FBG484I
UART_RX X1
UART_TX X2
X3
GND
R85 100
Led_FX3
VD1 LTST-E682KRKGWT
GND
U1A
CYUSB3014-BZXC
DQ0 R13 R14 F10 GPIO[0]
DQ1 R15 F9 GPIO[1]
DQ2 R16 F7 GPIO[2]
DQ3 R18 G10 GPIO[3]
DQ4 R20 G9 GPIO[4]
DQ5 R22 F8 GPIO[5]
DQ6 R24 H10 GPIO[6]
DQ7 R26 H9 GPIO[7]
DQ8 R28 J10 GPIO[8]
DQ9 R30 J9 GPIO[9]
DQ10 R32 K11 GPIO[10]
DQ11 R34 L10 GPIO[11]
DQ12 R36 K10 GPIO[12]
DQ13 R38 K9 GPIO[13]
DQ14 R40 J8 GPIO[14]
DQ15 R42 G8 GPIO[15]
PCLK R44 J6 GPIO[16]
CTL0_SLCS_CSI_B R46 K8 GPIO[17]
CTL1_SLWR_RDWR_B R48 K7 GPIO[18]
CTL2_SLOE R50 J7 GPIO[19]
CTL3_SLRD R52 H7 GPIO[20]
strob_data R56 G7 GPIO[21]
CTL5_FLAGB R58 G6 GPIO[22]
CTL6_FLAGC R60 K6 GPIO[23]
CTL7_PRTEND R62 H8 GPIO[24]
CTL8_FLAGD R64 G5 GPIO[25]
CTL9 R66 H6 GPIO[26]
CCLK R67 K5 GPIO[27]
CTL11_A0 R68 J5 GPIO[28]
CTL12_A1 H5 GPIO[29]
22
GPIO[30] G4 PMODE0
GPIO[31] H4 PMODE1
GPIO[32] L4 R17 PMODE2
GPIO[33] K2 R19 DQ16
GPIO[34] J4 R21 DQ17
GPIO[35] K1 R23 DQ18
GPIO[36] J2 R25 DQ19
GPIO[37] J3 R27 DQ20
GPIO[38] J1 R29 DQ21
GPIO[39] H2 R31 DQ22
GPIO[40] H3 R33 DQ23
GPIO[41] F4 R35 DQ24
GPIO[42] G2 R37 DQ25
GPIO[43] G3 R39 DQ26
GPIO[44] F3 R41 DQ27
GPIO[45] F2 R43 FX3_ready
GPIO[46] E5 R45 DQ28
GPIO[47] E1 R47 DQ29
GPIO[48] E5 R49 DQ30
GPIO[49] E4 R51 DQ31
GPIO[50] D1 R53 DONE
GPIO[51] D2 R57 Artix_ready
GPIO[52] D3 R59 INIT_B
GPIO[53] D4 R61 CCLK_SPI
GPIO[54] C1 R63 PROGRAM_B
GPIO[55] C2 R65 GPIO55
GPIO[56] D5 GPIO56
GPIO[57] C4
I2C_GPIO[58] D9 SCL
I2C_GPIO[59] D10 SDA
O[60] D11
R69 2k Led_FX3
VIO_3V3
R70 0 M0 R71 0
R75 0 M1 R76 0
R77 0 M2 R78 0
GND
PMODE0
R72 0 R73 0 R74 10k
PMODE1
R79 0 R80 0 R81 10k
PMODE2
R82 0 R83 0 R84 10k
GND VIO_3V3
X4 VIO_3V3
X5 TMS
X6 TCK
X7 TDO
X8 TDI
X9 GND
INIT_B PROGRAM_B DONE
R87 4.7k R88 4.7k R89 300
VIO_3V3
U4G
TDI R13 TDI_0
TDO U13 TDO_0
TCK V12 TCK_0
TMS T13 TMS_0
CCLK L12 CCLK_0
M0 U11 M0_0
M1 U10 M1_0
M2 U9 M2_0
DONE G11 DONE_0
INIT_B U12 INIT_B_0
PROGRAM_B N12 PROGRAM_B_0
U8 CFGBVS_0
VIO_3V3
GND L10 VP_0
M9 VN_0
AGND M10 VREFP_0
L9 VREFN_0
GND N10 DXP_0
N9 DXN_0
XC7A200T-1FBG484I
Title
Size A3
Number
Revision
Date: 1/15/2020
Sheet of
File: D:\Altium_prj\..\2_Artix_2_Cypress.SchDoc
Drawn By: