Sheet: Power

File: IoT12 Control Board Power.sch

Sheet: Input

File: IoT12 Control Board Input.sch

Sheet: Brain

File: IoT12 Control Board Brain.sch

Sheet: Output

File: IoT12 Control Board Output.sch

H1 MountingHole

H2 MountingHole

H3 MountingHole

H4 MountingHole

Sheet: /
File: IoT12 Control Board.sch

Title: IoT12-hardware

Size: A4	Date: 2021-04-10	**Rev: V2.1**
KiCad E.D.A. kicad (5.1.9)-1		Id: 1/5

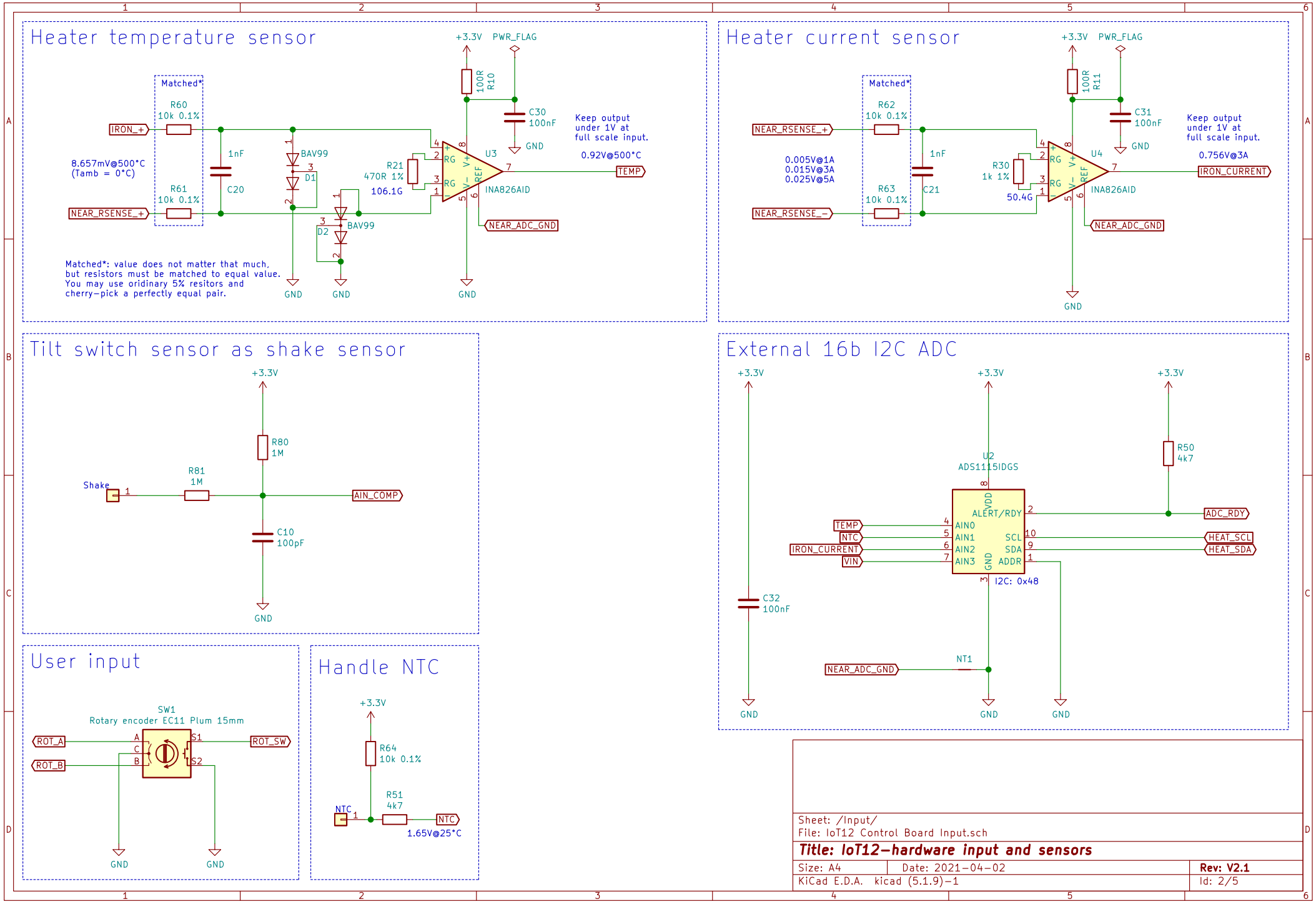

Sheet: /Input/
File: IoT12 Control Board Input.sch

Title: IoT12-hardware input and sensors

Size: A4	Date: 2021-04-02	**Rev: V2.1**
KiCad E.D.A. kicad (5.1.9)-1		Id: 2/5

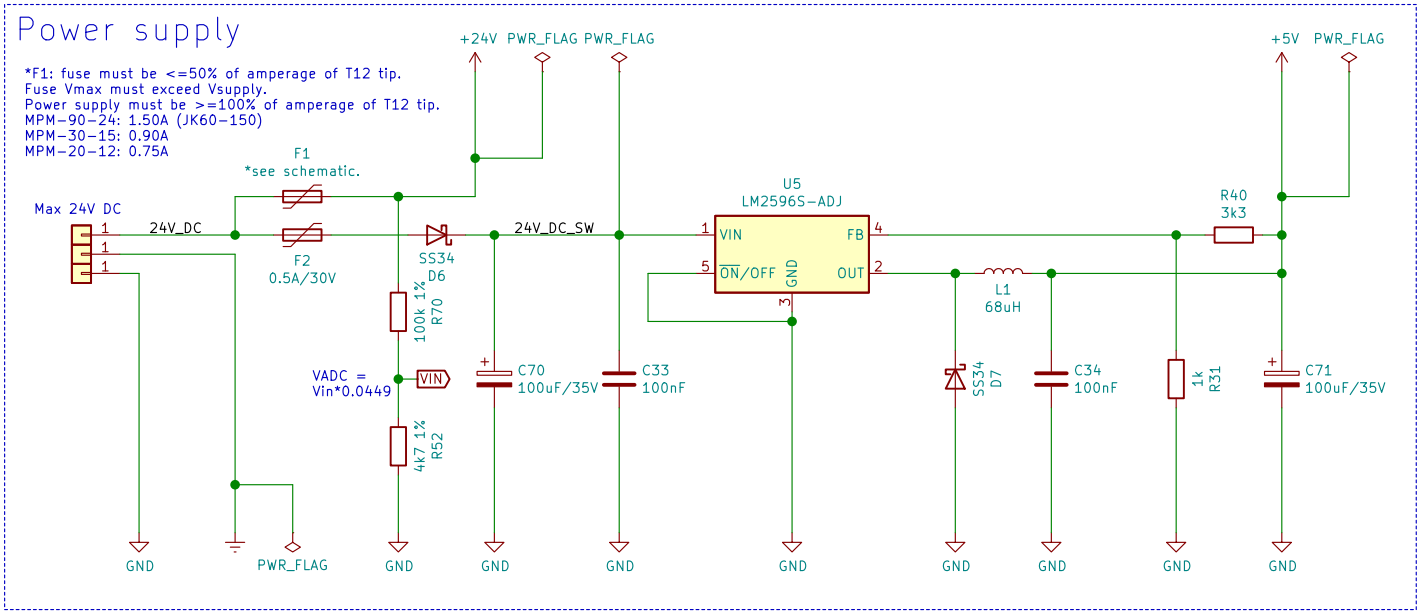

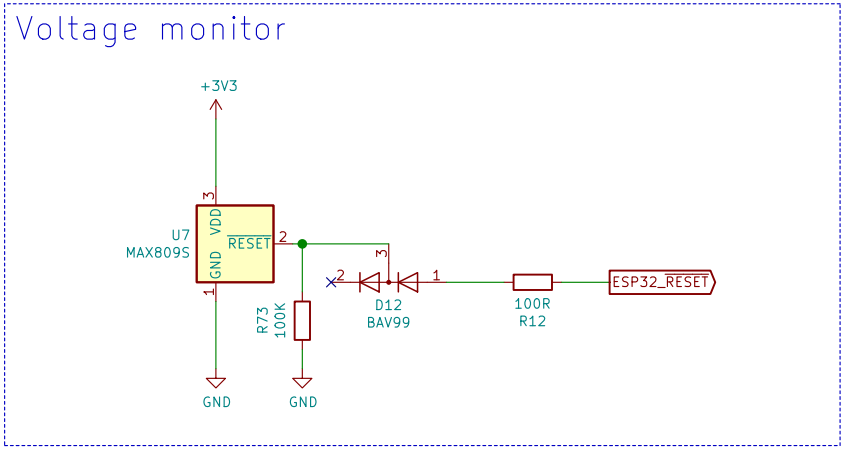

Sheet: /Power/
File: IoT12 Control Board Power.sch

Title: IoT12-hardware power supply

Size: A4	Date: 2021-04-02	**Rev: V2.1**
KiCad E.D.A. kicad (5.1.9)-1		Id: 3/5

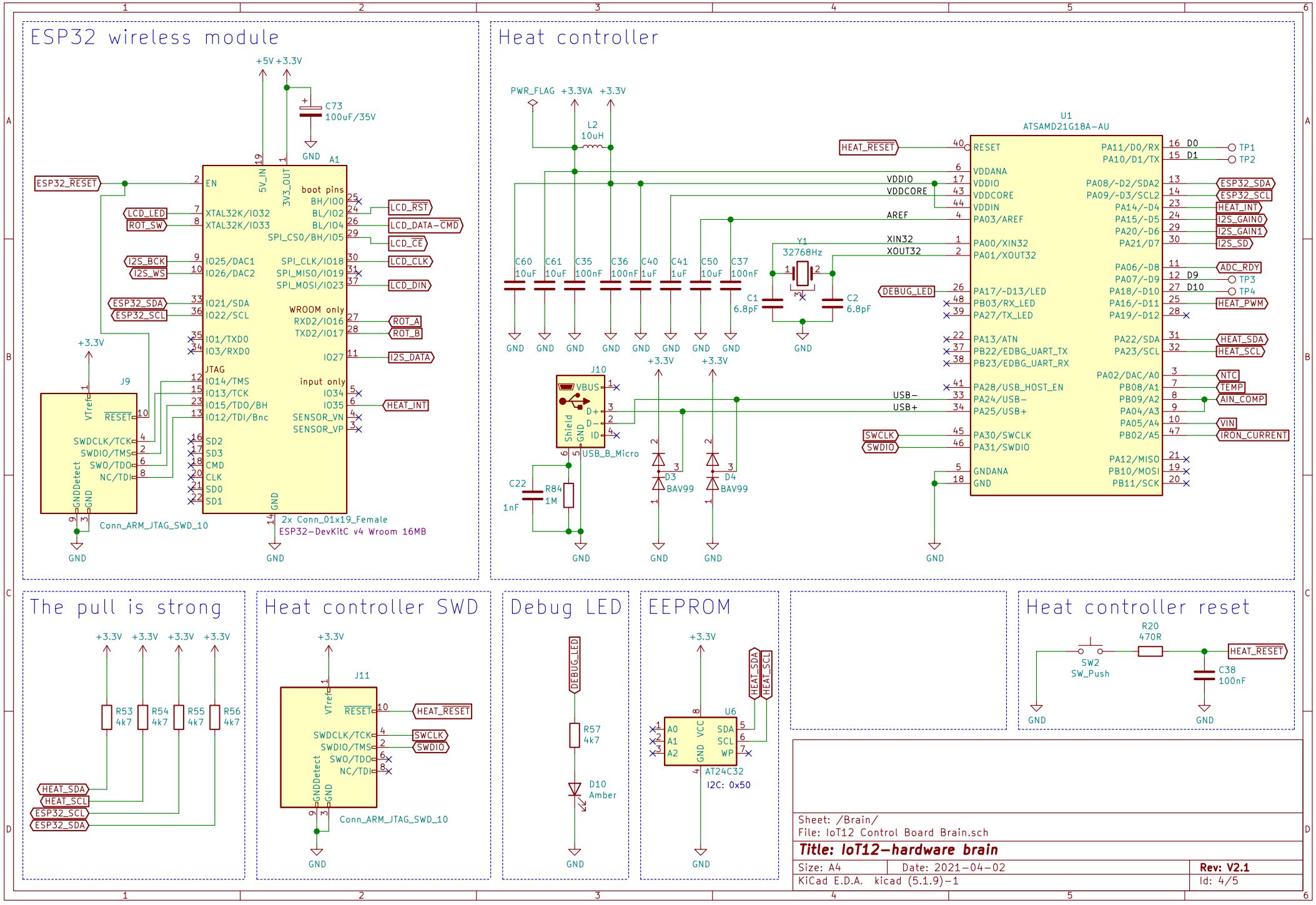
ESP32 wireless module
+5V +3.3V
C73
100uF/35V
GND
A1
ESP32_RESET
EN
5V_IN
3V3_OUT
boot pins
BH/IO0
BL/IO2
BL/IO4
SPI_CS0/BH/IO5
LCD_LED
ROT_SW
XTAL32K/IO32
XTAL32K/IO33
LCD_RST
LCD_DATA-CMD
LCD_CE
I2S_BCK
I2S_WS
IO25/DAC1
IO26/DAC2
SPI_CLK/IO18
SPI_MISO/IO19
SPI_MOSI/IO23
LCD_CLK
LCD_DIN
ESP32_SDA
ESP32_SCL
IO21/SDA
IO22/SCL
WROOM only
RXD2/IO16
TXD2/IO17
ROT_A
ROT_B
IO1/TXD0
IO3/RXD0
IO27
I2S_DATA
JTAG
IO14/TMS
IO13/TCK
IO15/TDO/BH
IO12/TDI/Bnc
input only
IO34
IO35
HEAT_INT
SENSOR_VN
SENSOR_VP
SD2
SD3
CMD
CLK
SD0
SD1
J9
VTref
RESET
SWDCLK/TCK
SWDIO/TMS
SWO/TDO
NC/TDI
GNDDetect
Conn_ARM_JTAG_SWD_10
2x Conn_01x19_Female
ESP32-DevKitC v4 Wroom 16MB
Heat controller
PWR_FLAG +3.3VA +3.3V
L2
10uH
U1
ATSAMD21G18A-AU
HEAT_RESET
RESET
VDDANA
VDDIO
VDDCORE
VDDIN
PA03/AREF
PA00/XIN32
PA01/XOUT32
PA17/~D13/LED
PB03/RX_LED
PA27/TX_LED
PA13/ATN
PB22/EDBG_UART_TX
PB23/EDBG_UART_RX
PA28/USB_HOST_EN
PA24/USB-
PA25/USB+
PA30/SWCLK
PA31/SWDIO
GNDANA
GND
PA11/D0/RX
PA10/D1/TX
PA08/~D2/SDA2
PA09/~D3/SCL2
PA14/~D4
PA15/~D5
PA20/~D6
PA21/D7
PA06/~D8
PA07/~D9
PA18/~D10
PA16/~D11
PA19/~D12
PA22/SDA
PA23/SCL
PA02/DAC/A0
PB08/A1
PB09/A2
PA04/A3
PA05/A4
PB02/A5
PA12/MISO
PB10/MOSI
PB11/SCK
TP1
TP2
TP3
TP4
ESP32_SDA
ESP32_SCL
HEAT_INT
I2S_GAIN0
I2S_GAIN1
I2S_SD
ADC_RDY
HEAT_PWM
HEAT_SDA
HEAT_SCL
NTC
TEMP
AIN_COMP
VIN
IRON_CURRENT
VDDIO
VDDCORE
AREF
XIN32
XOUT32
DEBUG_LED
SWCLK
SWDIO
USB-
USB+
C60 10uF
C61 10uF
C35 100nF
C36 100nF
C40 1uF
C41 1uF
C50 10uF
C37 100nF
Y1
32768Hz
C1 6.8pF
C2 6.8pF
J10
VBUS
D+
D-
ID
Shield
USB_B_Micro
C22 1nF
R84 1M
D3 BAV99
D4 BAV99
The pull is strong
R53 4k7
R54 4k7
R55 4k7
R56 4k7
HEAT_SDA
HEAT_SCL
ESP32_SCL
ESP32_SDA
Heat controller SWD
J11
Conn_ARM_JTAG_SWD_10
Debug LED
R57 4k7
D10 Amber
EEPROM
U6
A0
A1
A2
VCC
SDA
SCL
WP
AT24C32
I2C: 0x50
Heat controller reset
R20 470R
SW2 SW_Push
C38 100nF
Sheet: /Brain/
File: IoT12 Control Board Brain.sch
Title: IoT12-hardware brain
Size: A4
Date: 2021-04-02
Rev: V2.1
KiCad E.D.A. kicad (5.1.9)-1
Id: 4/5

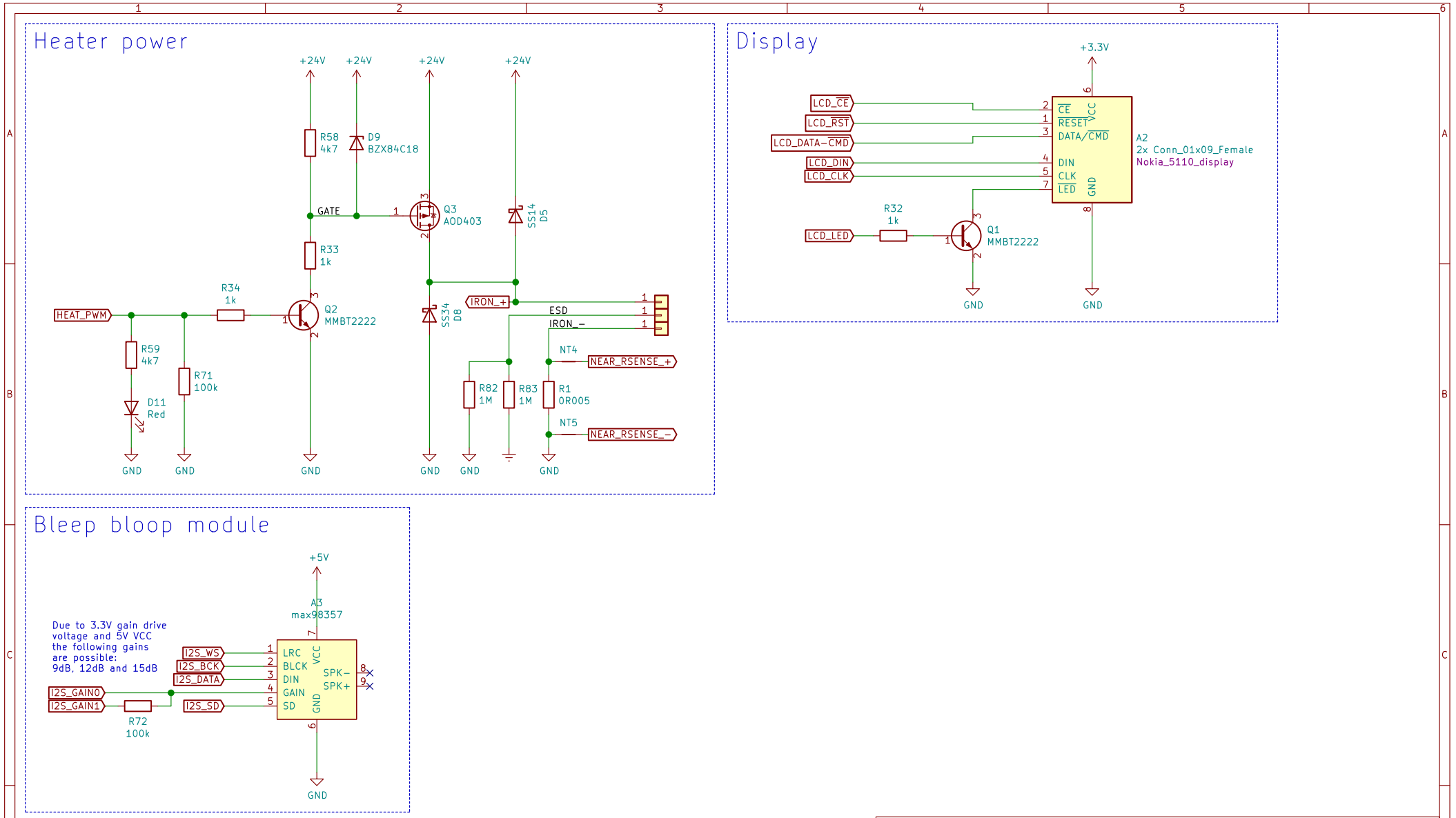

Sheet: /Output/
File: IoT12 Control Board Output.sch

Title: IoT12−hardware output

Size: A4	Date: 2021−04−02	**Rev: V2.1**
KiCad E.D.A. kicad (5.1.9)−1		Id: 5/5