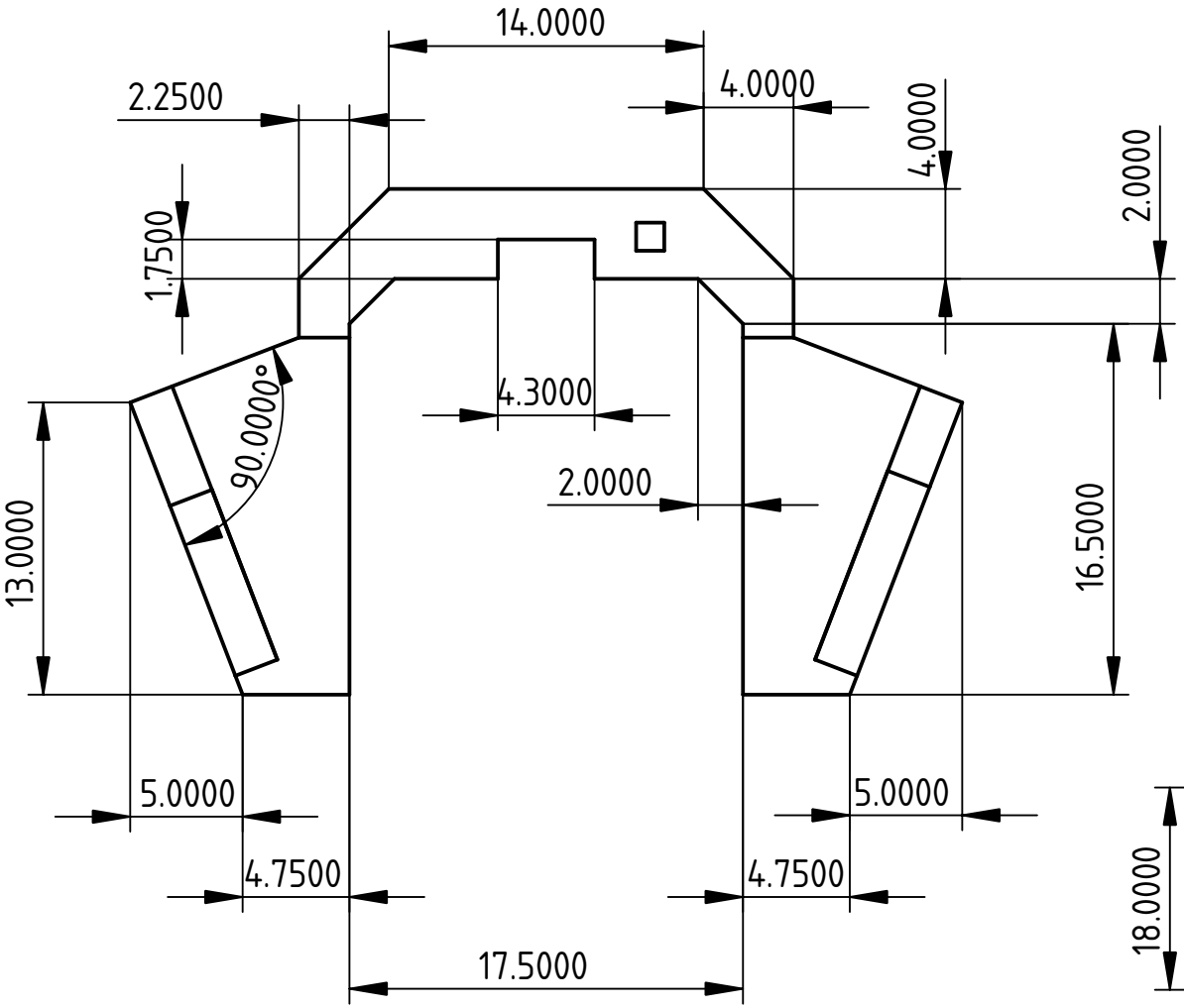

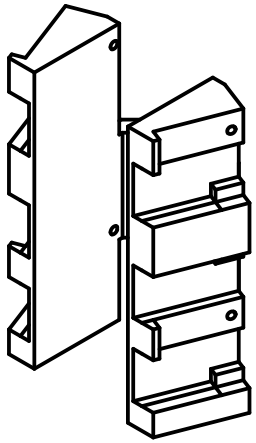

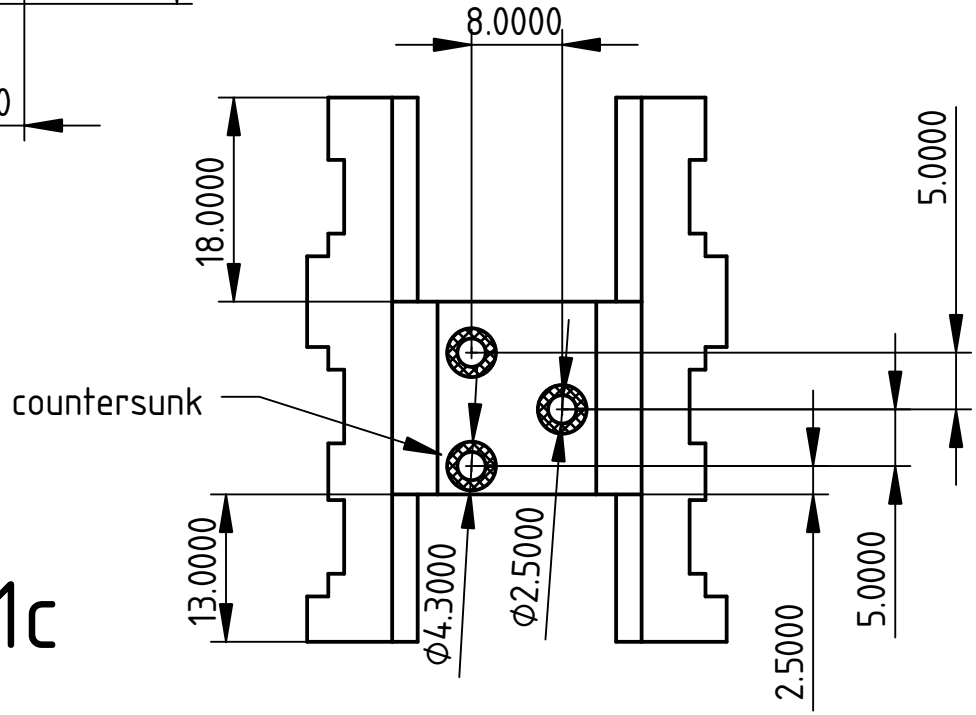

DBC Board Holder rev 1c