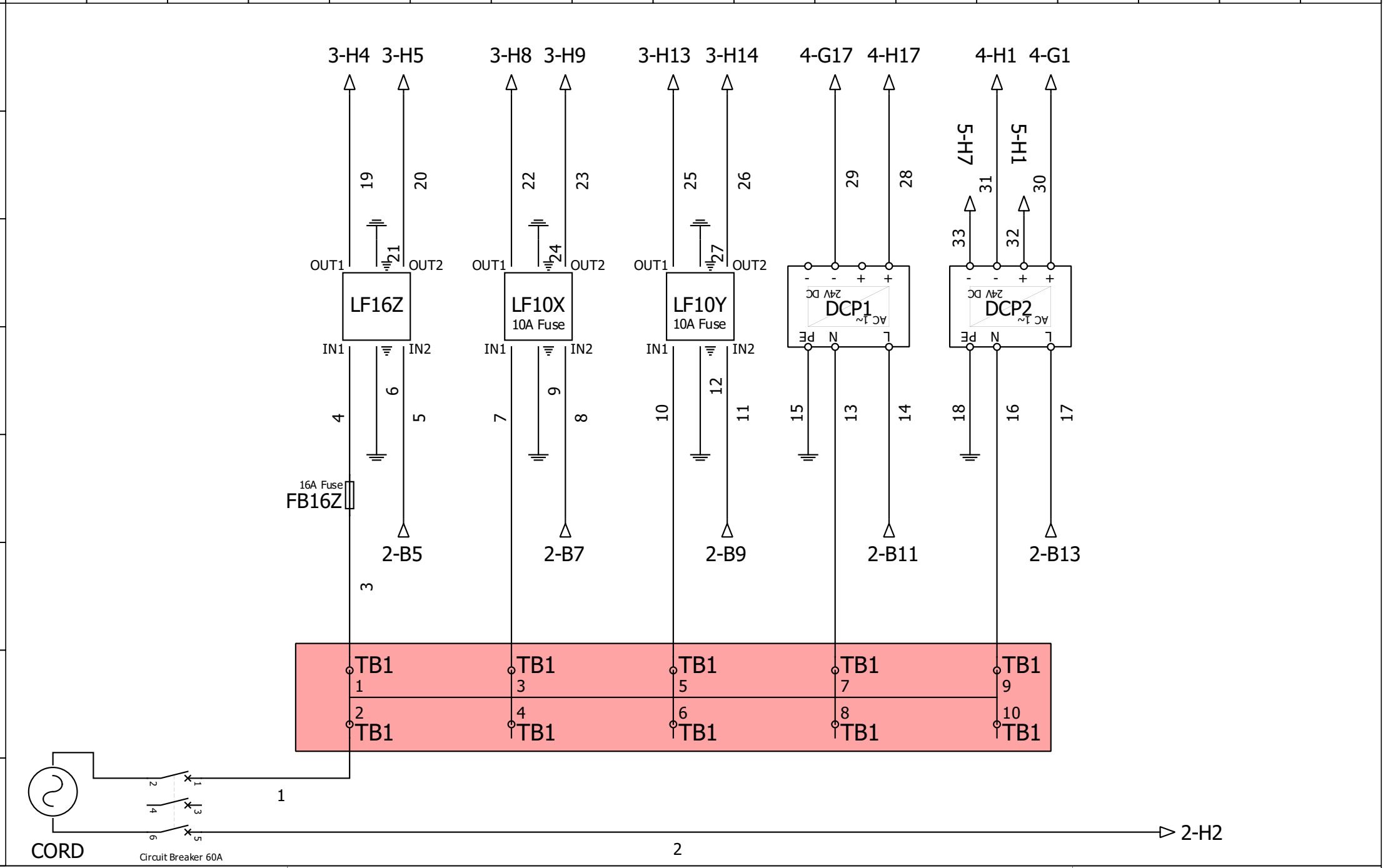

Author: Robbie Himself	230V Terminal Block 1 Leg 1 Red	File:
Date: 3/19/2022		Folio: 1/7

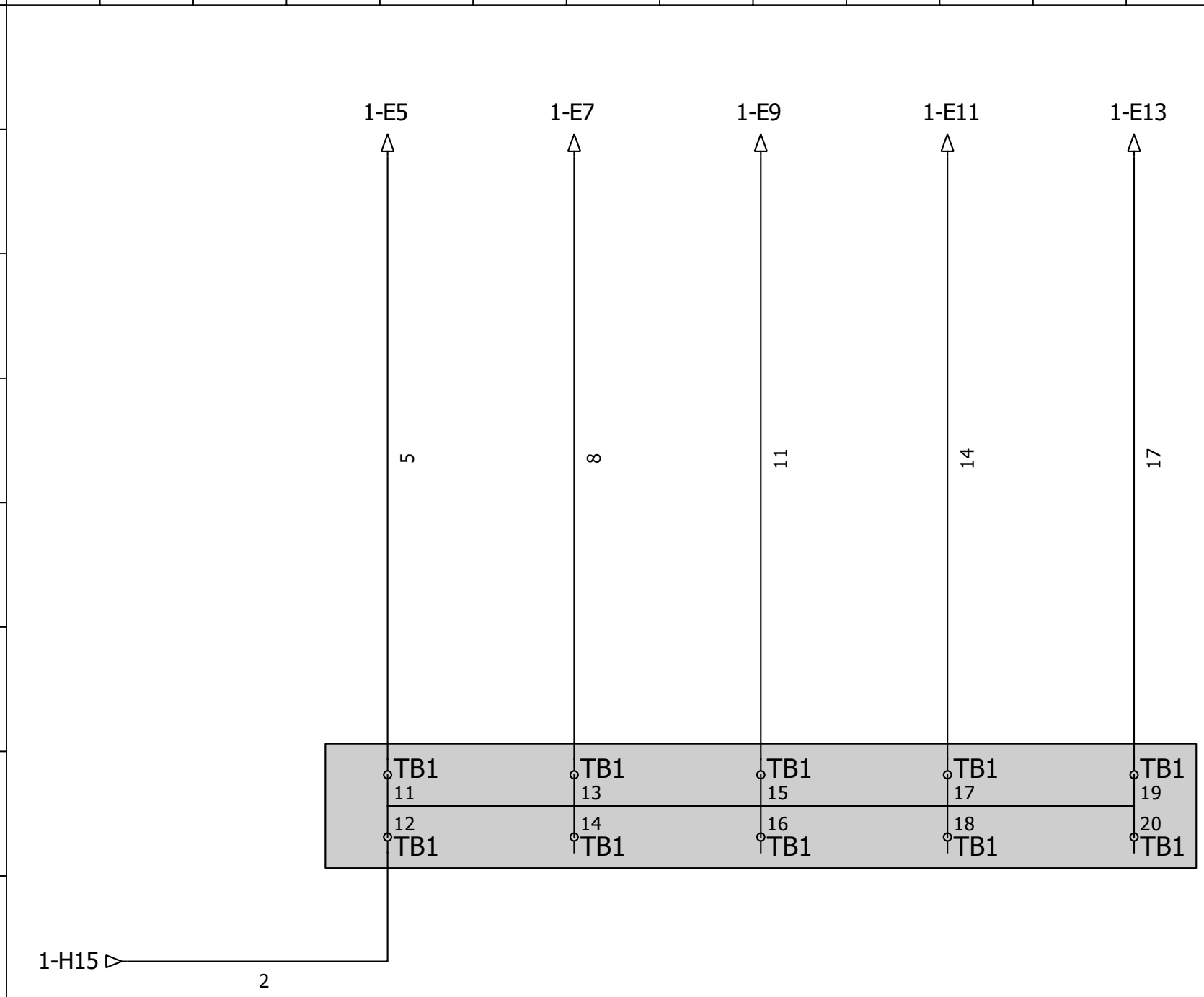

Author: Robbie Himself	230V Terminal Block 1 Leg 2 Black	File:
Date: 3/19/2022		Folio: 2/7

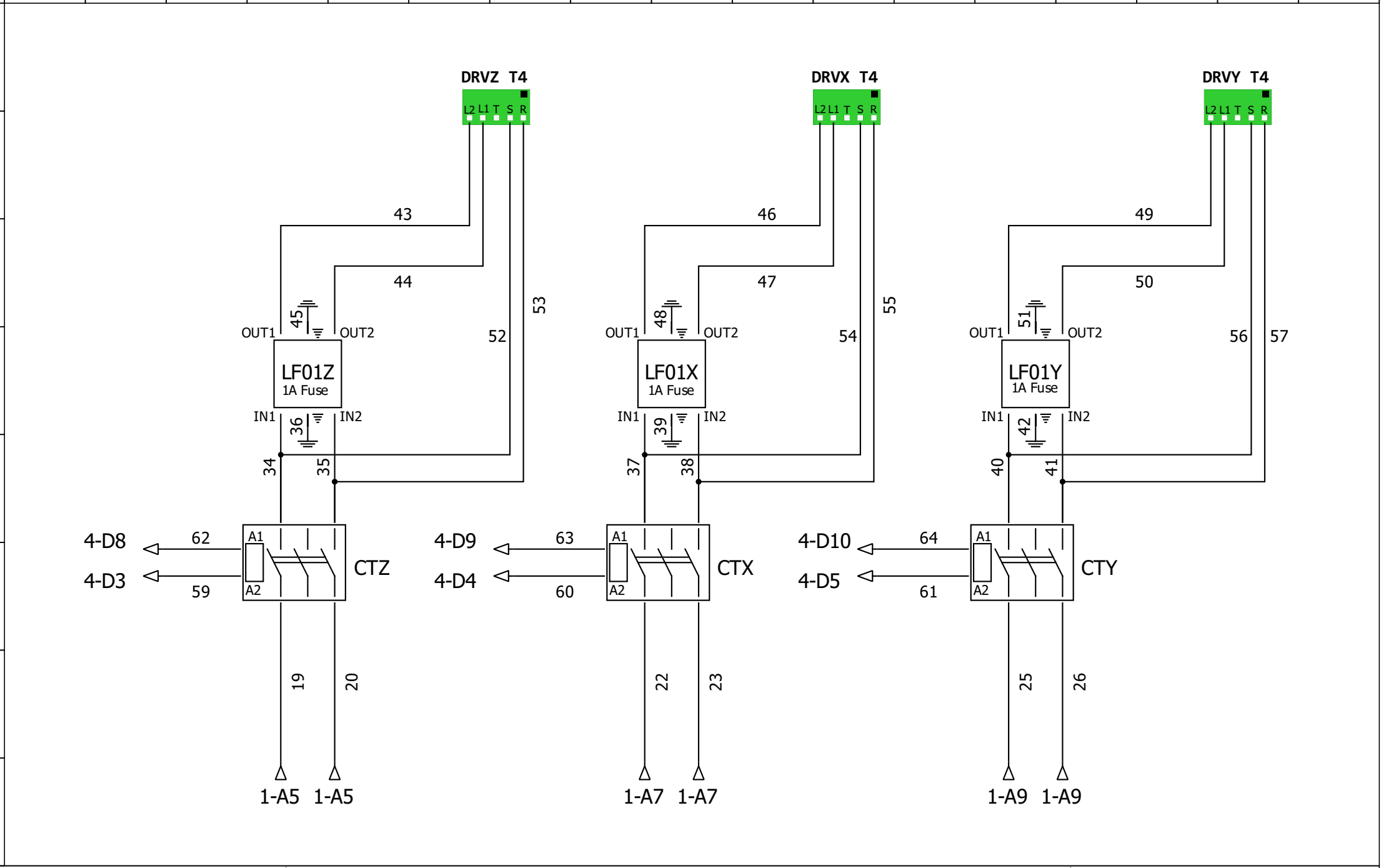

Author: Robbie Himself	230V AC Contactors	File:
Date: 3/19/2022		Folio: 3/7

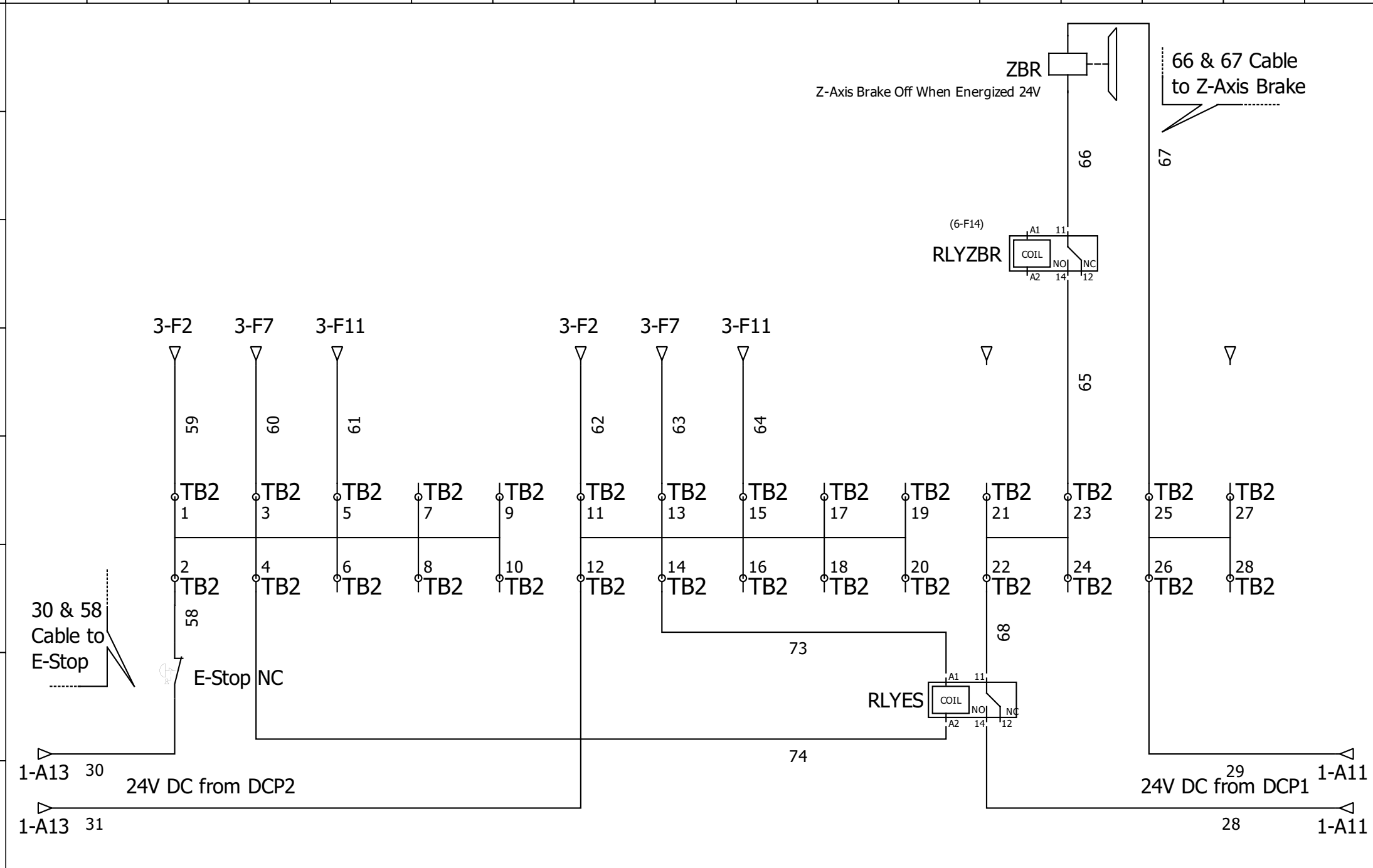

Author: Robbie Himself	TB2 24V E-STOP & Z-Axis Brake	File:
Date: 3/13/2022		Folio: 4/7

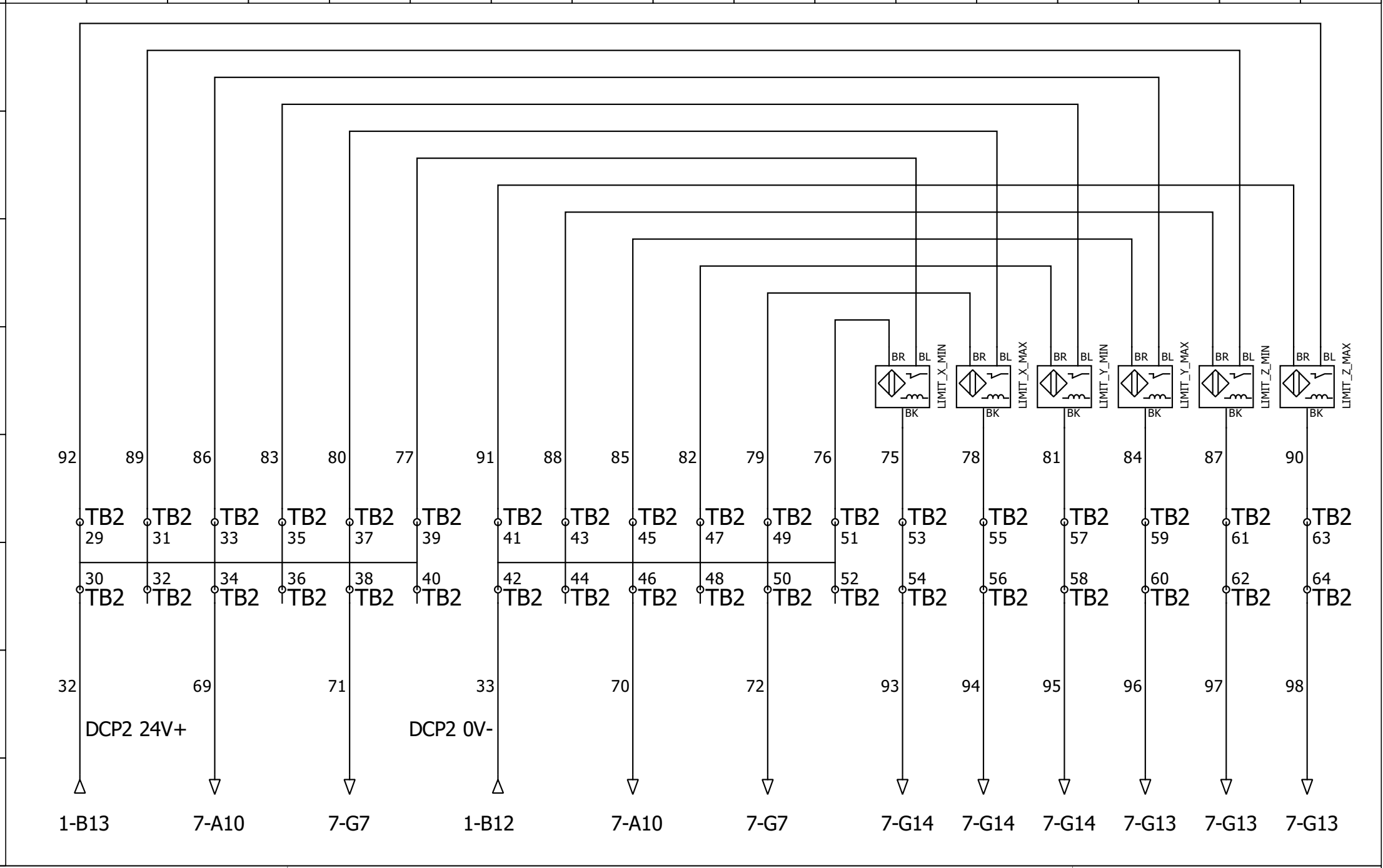

Author: Robbie Himself	TB2 24V Limit Switch Connections	File:
Date: 3/21/2022		Folio: 5/7

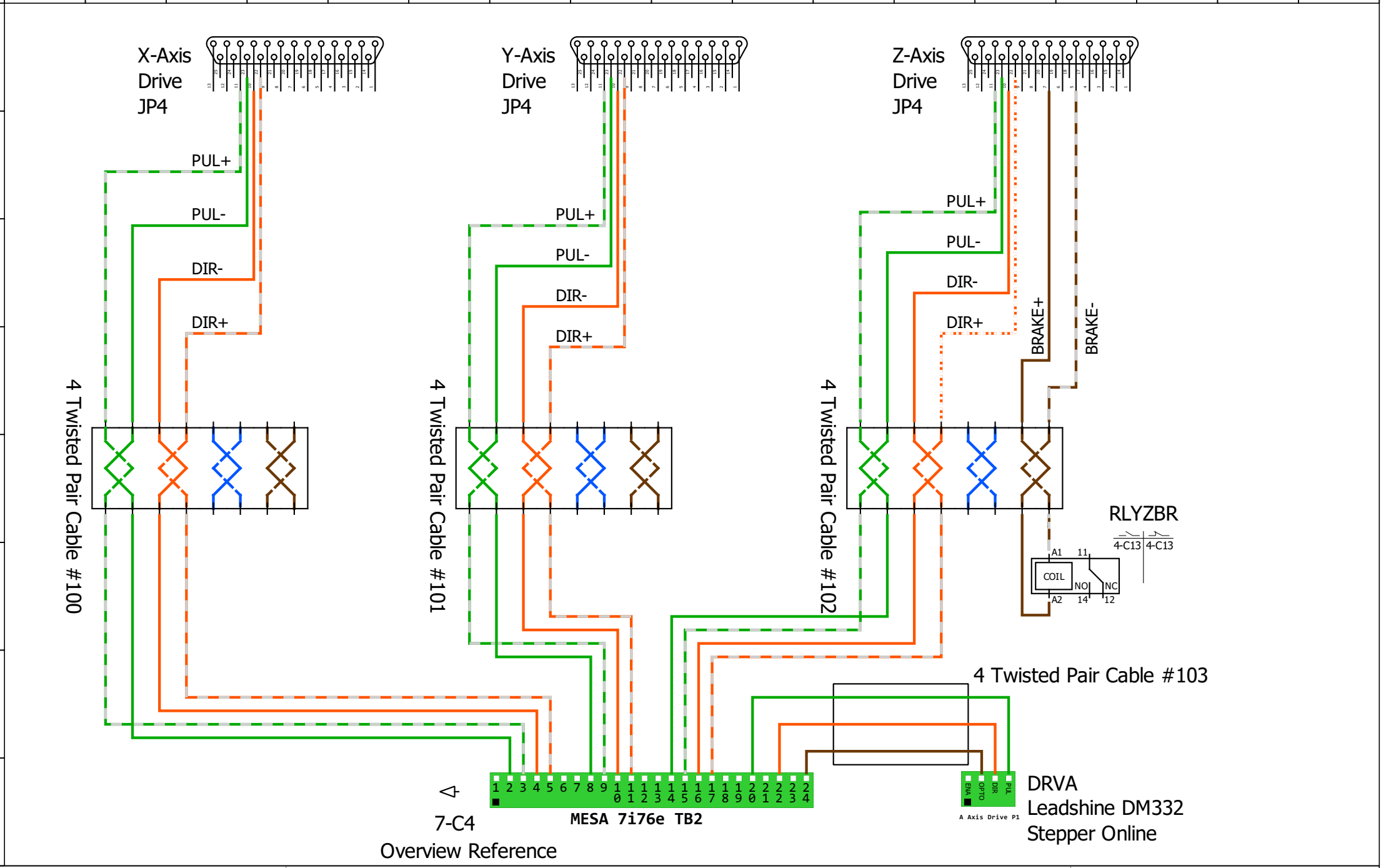

Author: Robbie Himself	MESA 7i76e TB2 Connections	File:
Date: 3/6/2022		Folio: 6/7

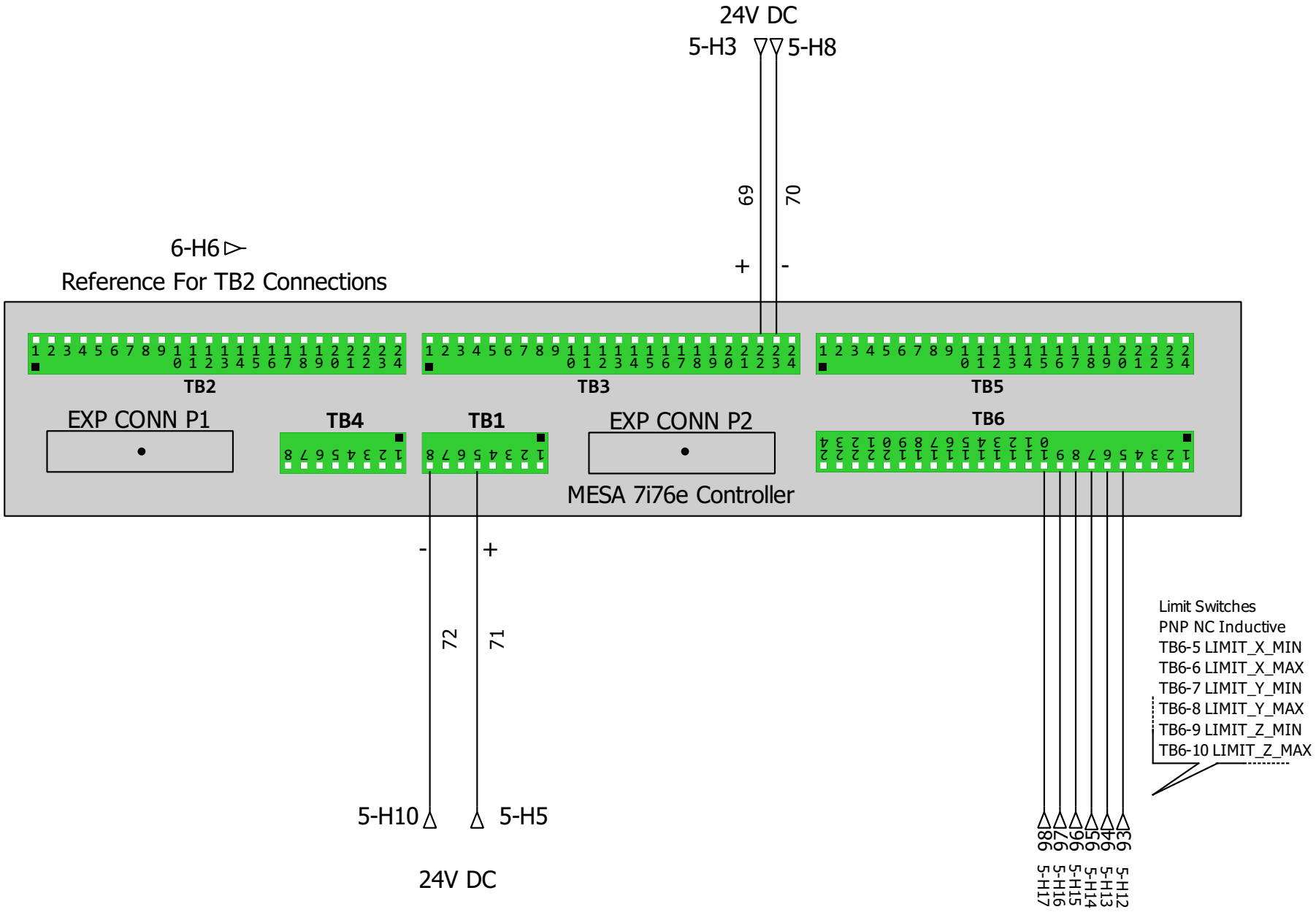

Author: Robbie Himself	MESA 7i76e Overview	File:
Date: 3/23/2022		Folio: 7/7