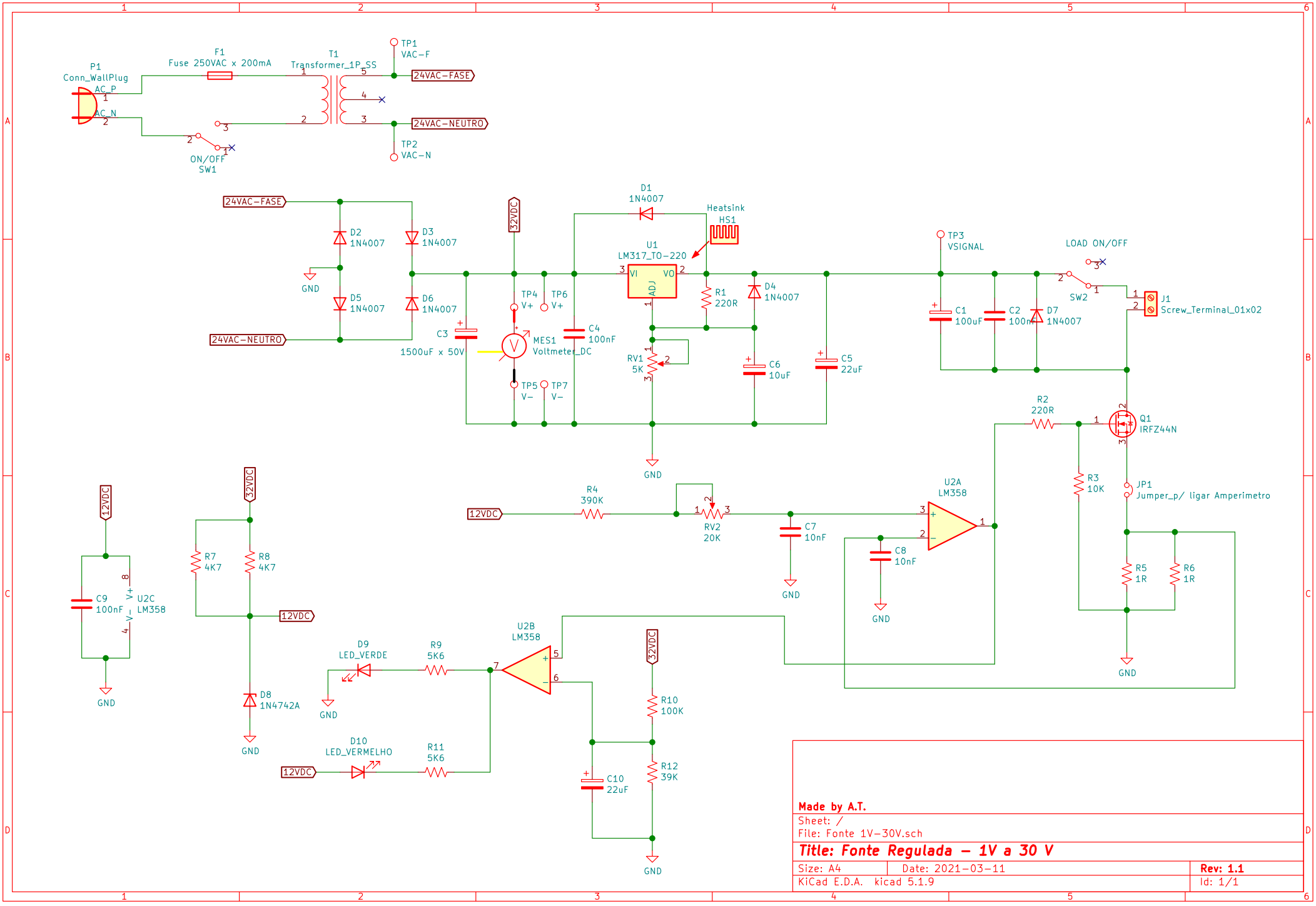
P1
Conn_WallPlug
AC_P
AC_N
F1
Fuse 250VAC x 200mA
T1
Transformer_1P_SS
TP1
VAC-F
24VAC-FASE
24VAC-NEUTRO
TP2
VAC-N
ON/OFF
SW1
D1
1N4007
Heatsink
HS1
U1
LM317_TO-220
VI
VO
ADJ
D2
1N4007
D3
1N4007
D5
1N4007
D6
1N4007
GND
32VDC
TP4
V+
TP6
V+
TP5
V-
TP7
V-
C3
1500uF x 50V
MES1
Voltmeter_DC
C4
100nF
RV1
5K
R1
220R
D4
1N4007
C6
10uF
C5
22uF
TP3
VSIGNAL
LOAD ON/OFF
SW2
C1
100uF
C2
100nF
D7
1N4007
J1
Screw_Terminal_01x02
R2
220R
Q1
IRFZ44N
R3
10K
JP1
Jumper_p/ ligar Amperimetro
R5
1R
R6
1R
12VDC
R4
390K
RV2
20K
C7
10nF
C8
10nF
U2A
LM358
C9
100nF
U2C
LM358
R7
4K7
R8
4K7
D8
1N4742A
D9
LED_VERDE
R9
5K6
U2B
LM358
D10
LED_VERMELHO
R11
5K6
R10
100K
R12
39K
C10
22uF
Made by A.T.
Sheet: /
File: Fonte 1V-30V.sch
Title: Fonte Regulada - 1V a 30 V
Size: A4
Date: 2021-03-11
Rev: 1.1
KiCad E.D.A. kicad 5.1.9
Id: 1/1