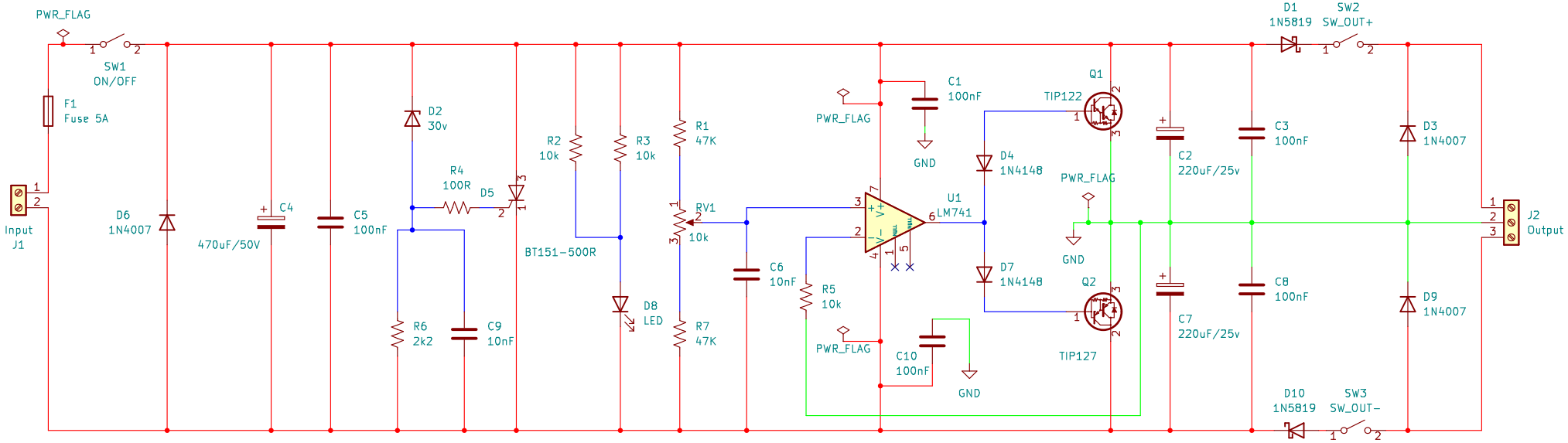

Made by A.T.

Sheet: /

File: simetrica.kicad_sch

Title: Symmetrical Power Supply – +15V / –15V

Size: A4	Date: 2024-02-04	**Rev: Version 2.0**
KiCad E.D.A. kicad 7.0.10-dirty		Id: 1/1