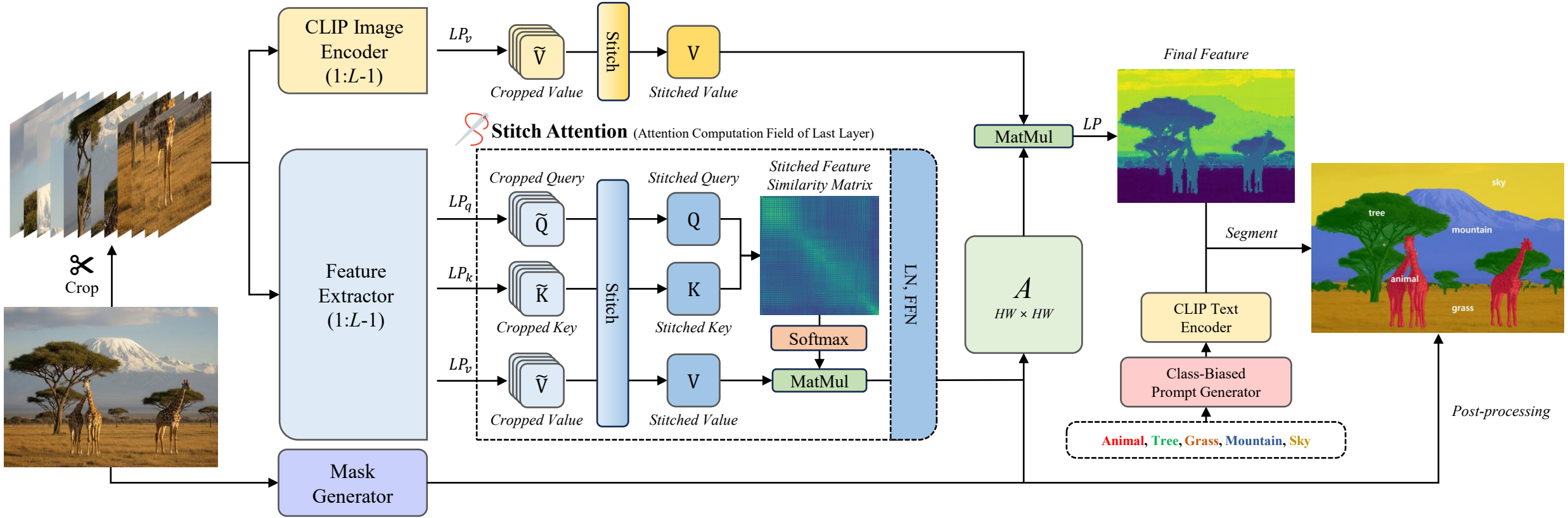
CLIP Image Encoder (1:L-1)
Feature Extractor (1:L-1)
Mask Generator
Crop
LP_v
LP_q
LP_k
Cropped Value
Cropped Query
Cropped Key
Stitch
Stitched Value
Stitched Query
Stitched Key
Stitch Attention (Attention Computation Field of Last Layer)
Stitched Feature Similarity Matrix
Softmax
MatMul
LN, FFN
A
HW × HW
LP
Final Feature
Segment
CLIP Text Encoder
Class-Biased Prompt Generator
Animal, Tree, Grass, Mountain, Sky
Post-processing
sky
tree
mountain
animal
grass