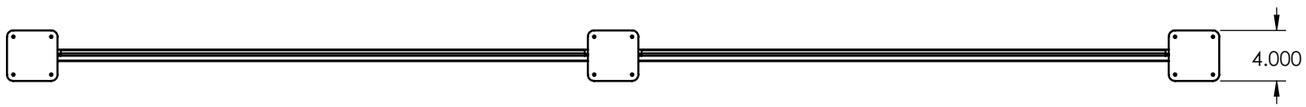

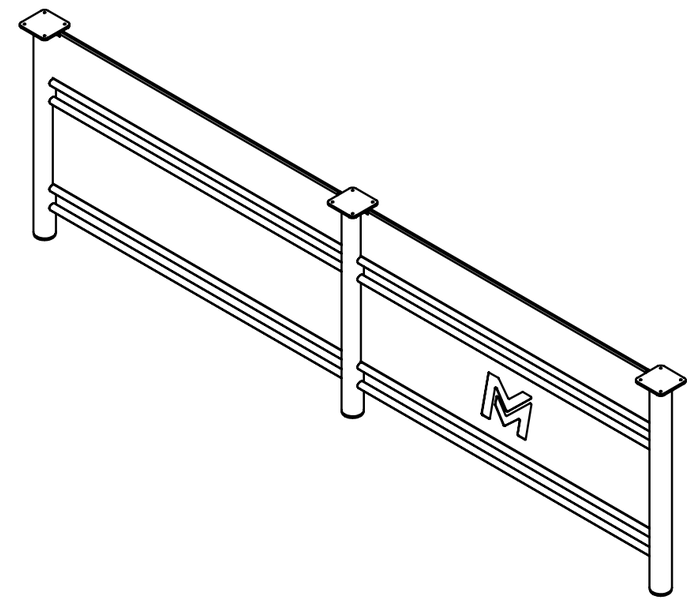

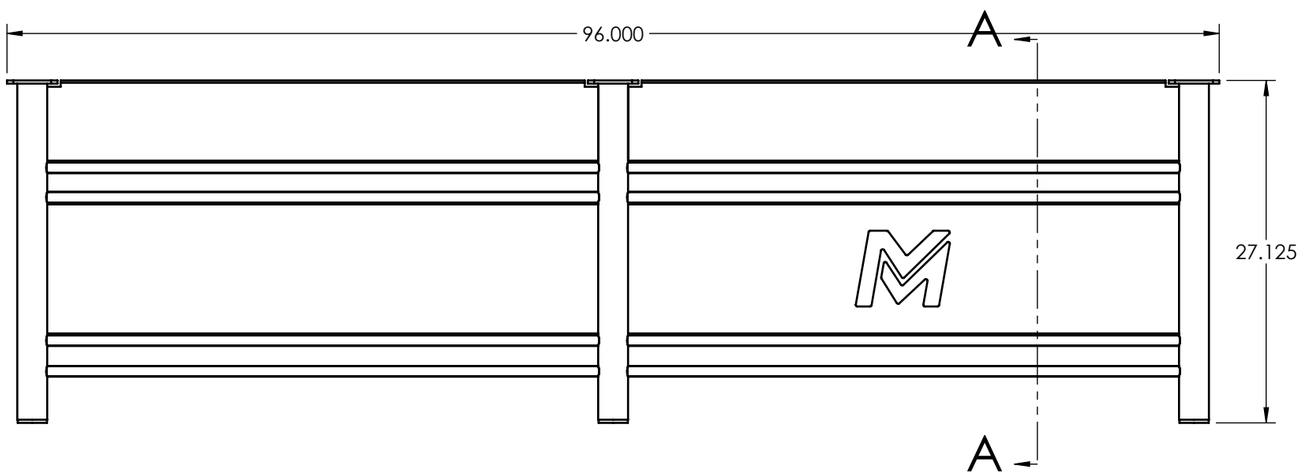

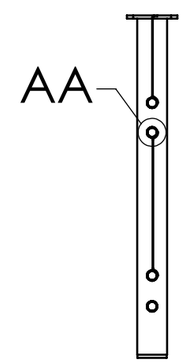

SECTION A-A

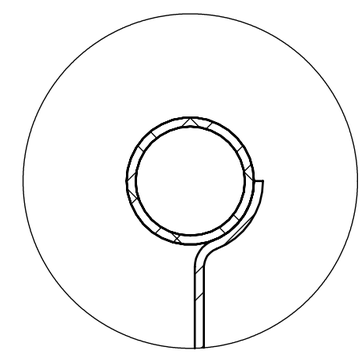

DETAIL VIEW AA
SCALE 1:1

		UNLESS OTHERWISE SPECIFIED:		NAME	DATE
		DIMENSIONS ARE IN INCHES TOLERANCES: FRACTIONAL ± ANGULAR: MACH ± BEND ± TWO PLACE DECIMAL ± THREE PLACE DECIMAL ±	DRAWN		
			CHECKED		
			ENG APPR.		
			MFG APPR.		
		INTERPRET GEOMETRIC TOLERANCING PER:	Q.A.		
		MATERIAL	COMMENTS:		
NEXT ASSY	USED ON	FINISH	***ERIKA AHLSWEDE***		
APPLICATION		DO NOT SCALE DRAWING			

M.M.C.C.

TITLE:

Desk Skirt Full Assembly

SIZE	DWG. NO.	REV
B	***ASSIGNMENT PAGE NUMBER*** ***ASSIGNMENT FIGURE NUMBER***	
SCALE: 1:2	WEIGHT:	SHEET 1 OF 6

PROPRIETARY AND CONFIDENTIAL

THE INFORMATION CONTAINED IN THIS DRAWING IS THE SOLE PROPERTY OF <INSERT COMPANY NAME HERE>. ANY REPRODUCTION IN PART OR AS A WHOLE WITHOUT THE WRITTEN PERMISSION OF <INSERT COMPANY NAME HERE> IS PROHIBITED.

SOLIDWORKS Educational Product. For Instructional Use Only.