REVISION NUMBER	MADE BY (INITIALS)	CHANGES MADE
X	X.X.X.	BREIF DESCRIPTION

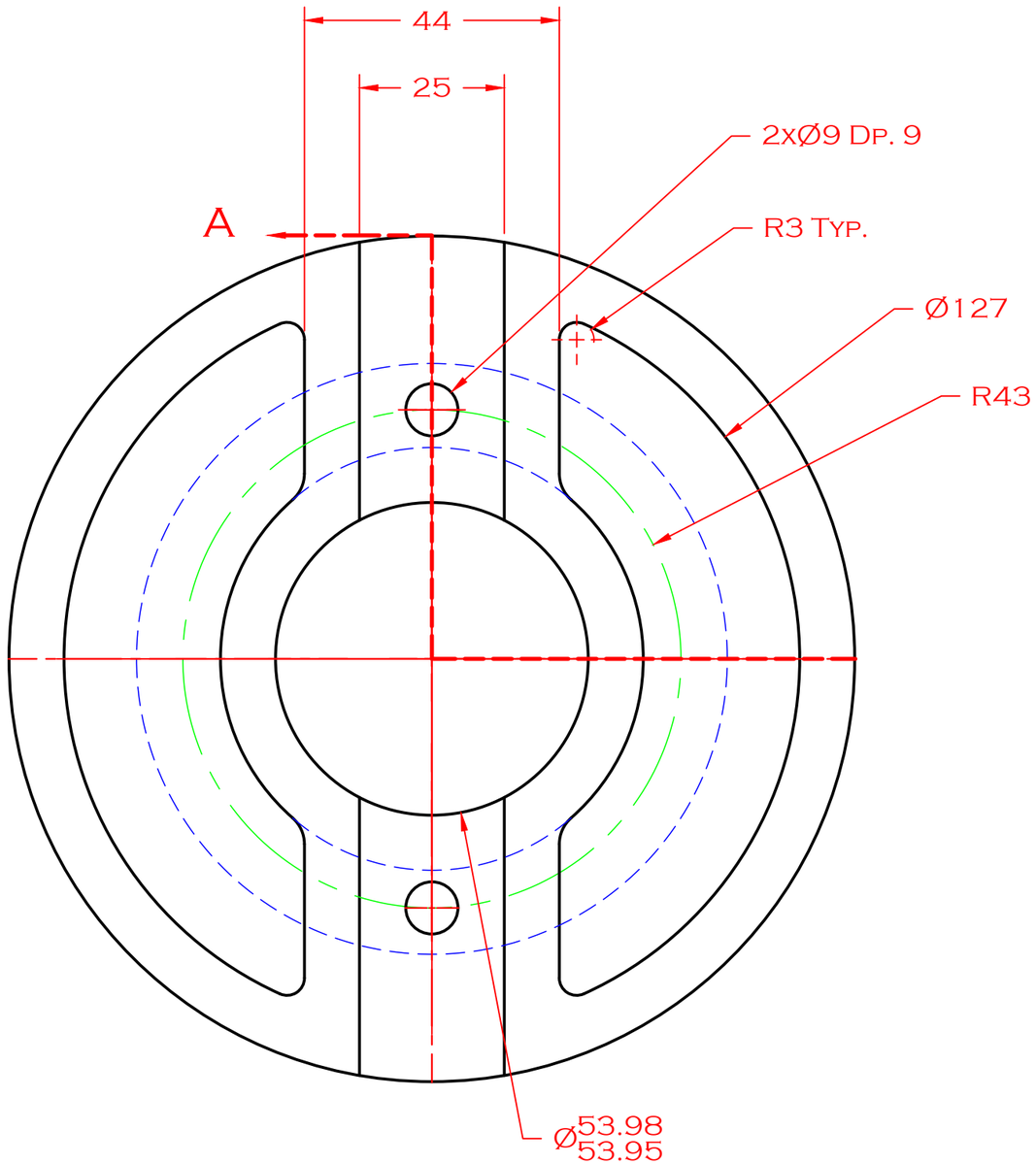

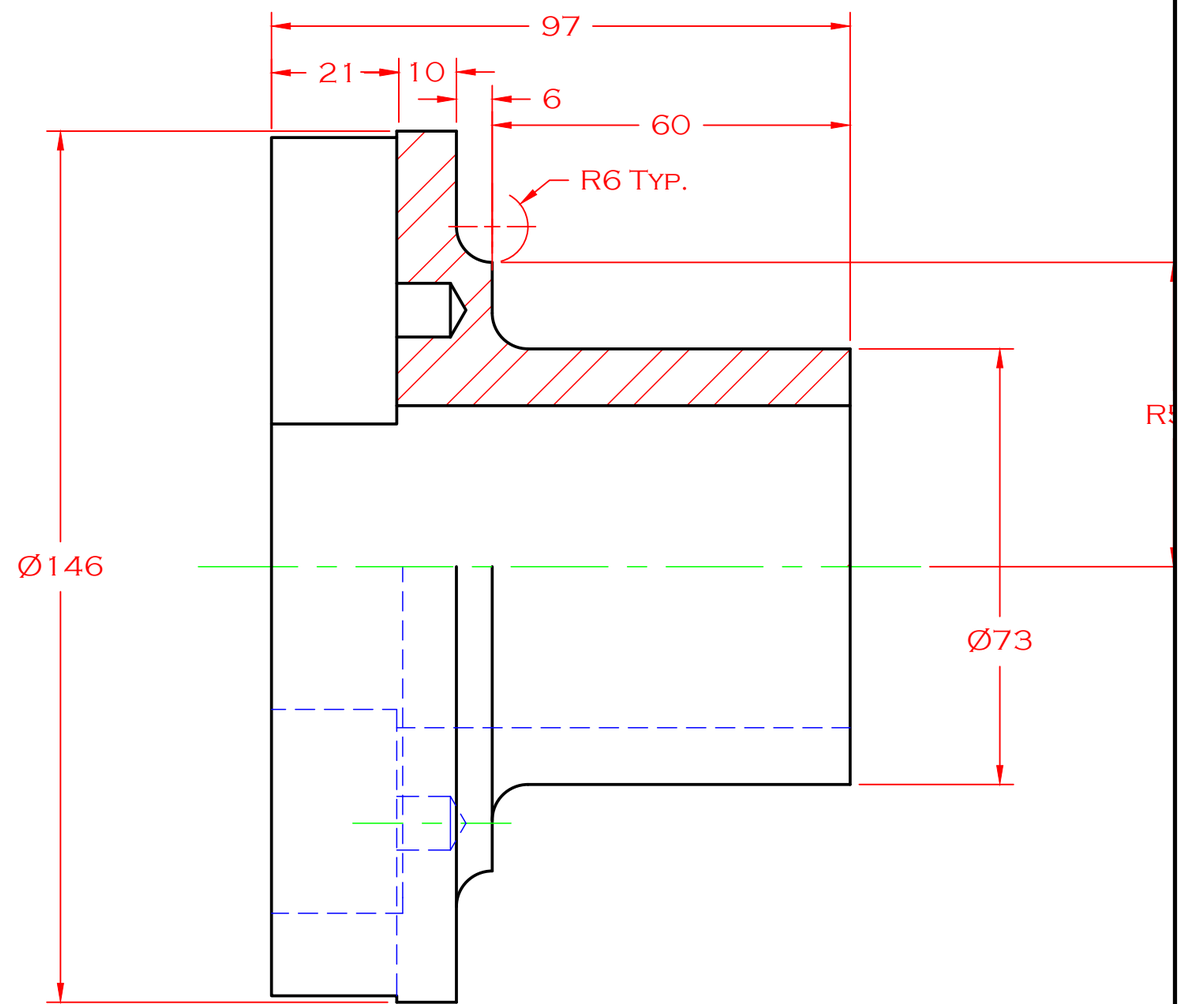

HALF SECTION A-A

METRIC

TOLERANCE UNLESS SPECIFIED:
.XX = ±.01
.XXX = ±.005
ANGLES = ±30'

Stock Guide	Exam 2-2.dwg	1:1	354	DRAFTING C.A.D. DEPARTMENT	MID MICHIGAN COMMUNITY COLLEGE
	Erika Ahlswede	11/20/2018	8.13		