REVISION NUMBER	MADE BY (INITIALS)	CHANGES MADE
X	X.X.X.	BREIF DESCRIPTION

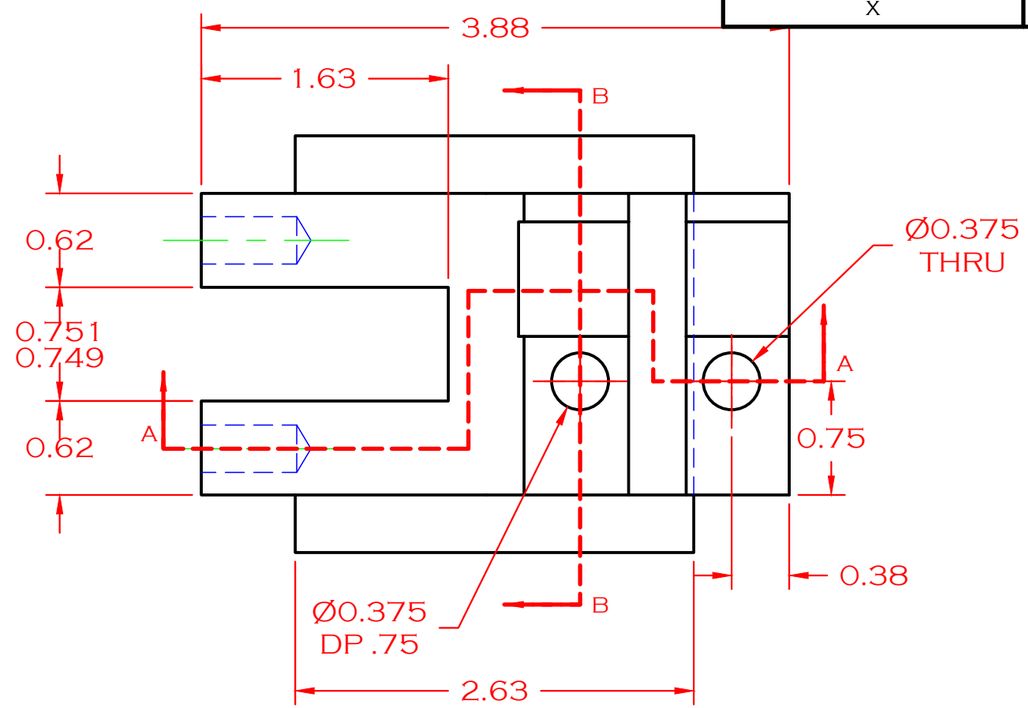

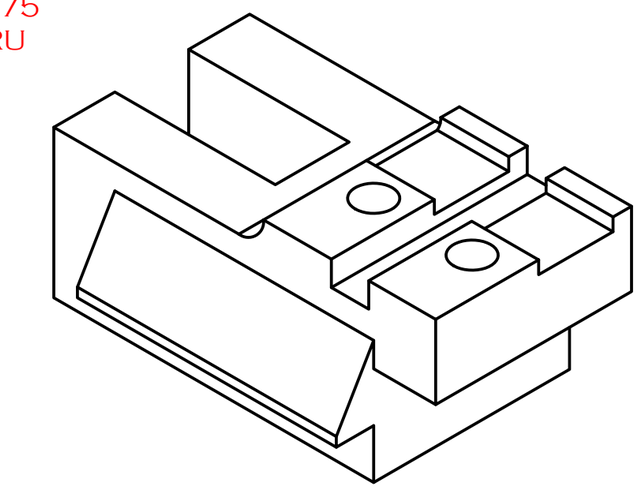

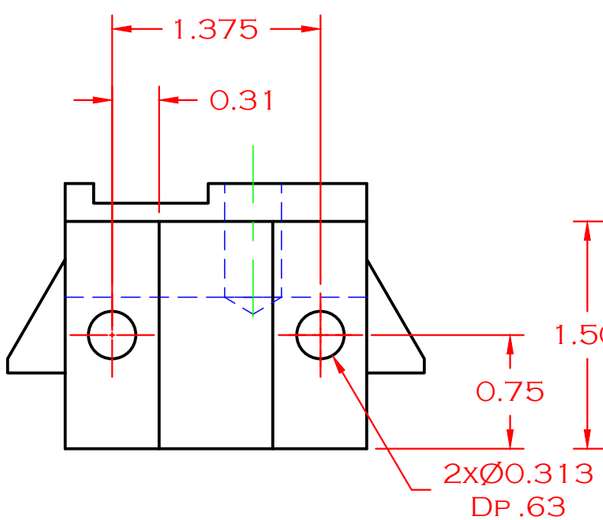

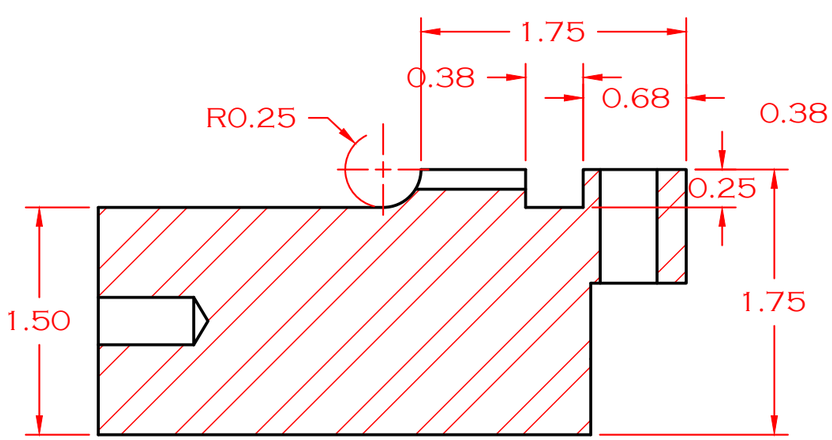

OFFSET SECTION A-A

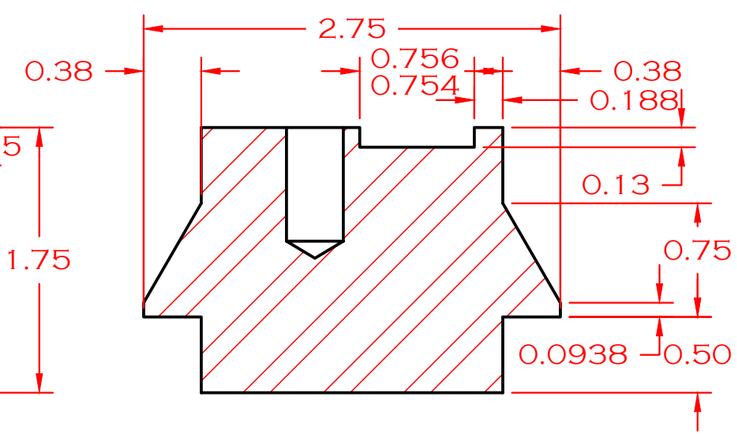

SECTION B-B

TOLERANCE UNLESS SPECIFIED:
.XX = ±.01
.XXX = ±.005
ANGLES = ±30'

TOOL HOLDER	PG.313 EX.7.13.DWG	1:11:1	PG. 313	DRAFTING C.A.D. DEPARTMENT	MID MICHIGAN COMMUNITY COLLEGE
	ERIKA AHLSWEDE	11/20/2018	EX. 7.31		