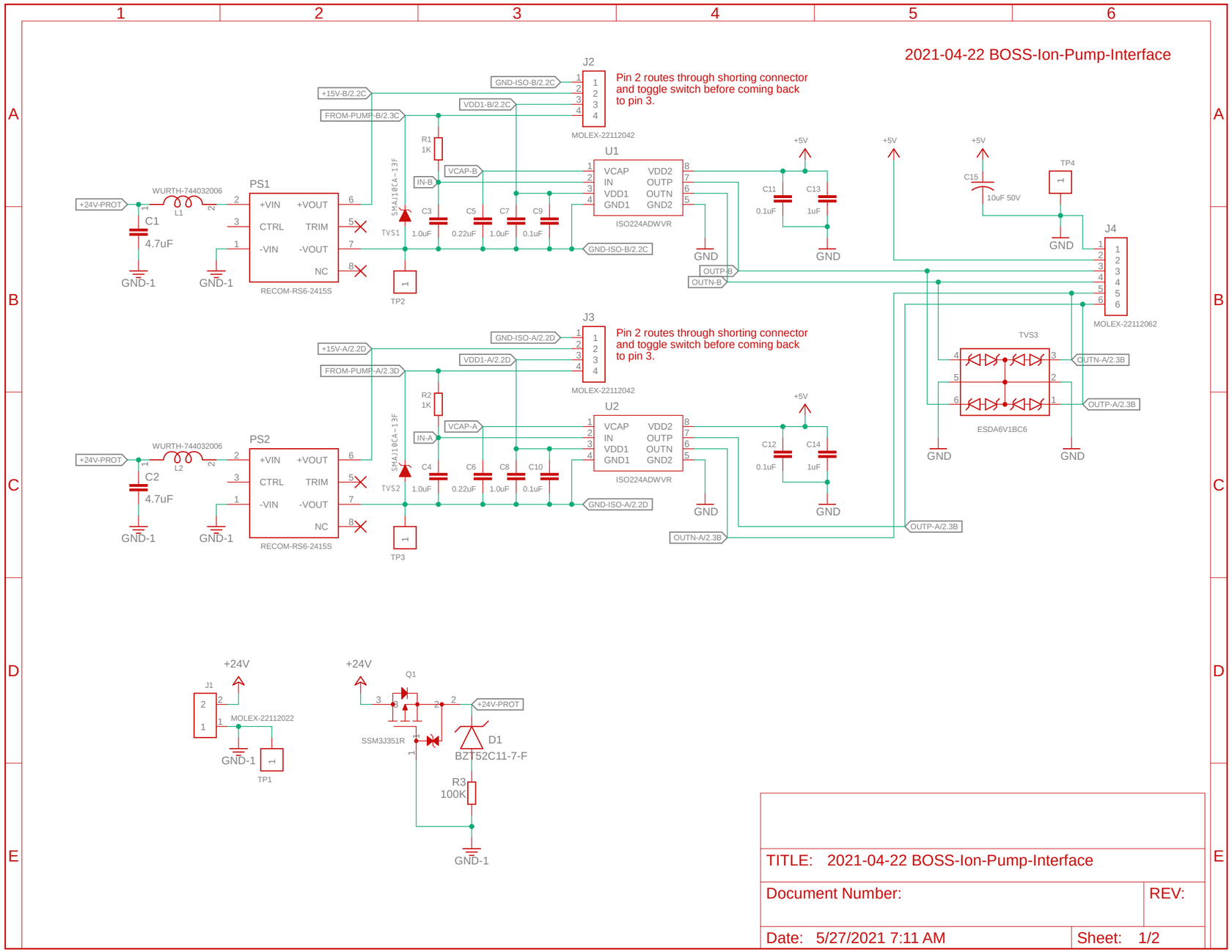
2021-04-22 BOSS-Ion-Pump-Interface
Pin 2 routes through shorting connector and toggle switch before coming back to pin 3.
Pin 2 routes through shorting connector and toggle switch before coming back to pin 3.
J2
J3
J4
J1
U1
U2
PS1
PS2
Q1
D1
BZT52C11-7-F
SSM3J351R
R3
100K
TVS3
ESDA6V1BC6
MOLEX-22112042
MOLEX-22112062
MOLEX-22112022
ISO224ADWVR
RECOM-RS6-2415S
WURTH-744032006
SMAJ10CA-13F
+24V-PROT
+24V
+5V
GND
GND-1
TITLE: 2021-04-22 BOSS-Ion-Pump-Interface
Document Number:
REV:
Date: 5/27/2021 7:11 AM
Sheet: 1/2

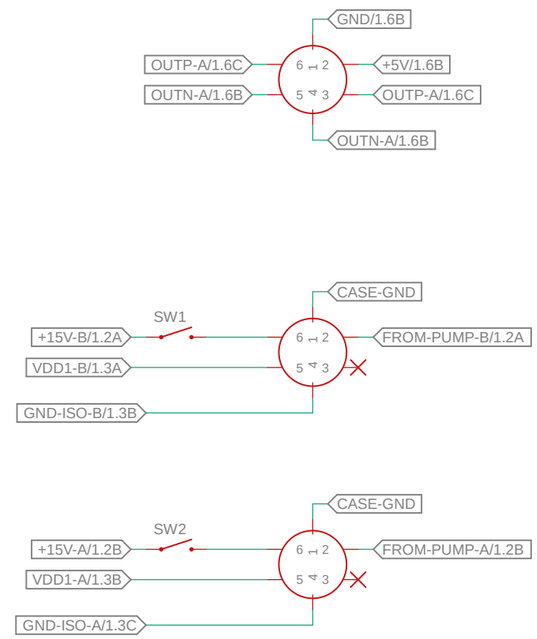

TITLE: 2021-04-22 BOSS-Ion-Pump-Interface	
Document Number:	REV:
Date: 5/27/2021 7:11 AM	Sheet: 2/2