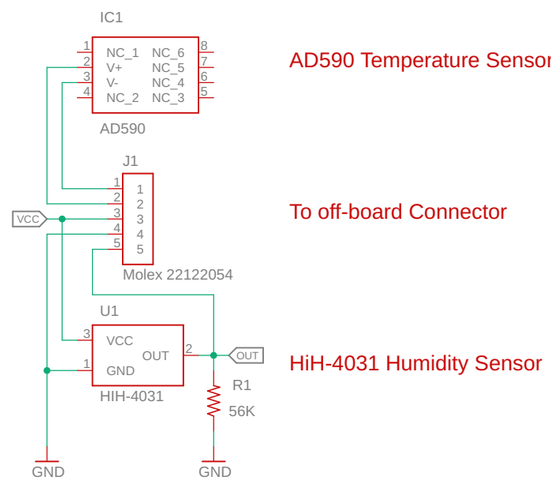

TITLE:

Document Number:

REV:

Date: 1/19/2022 12:54 PM

Sheet: 1/1