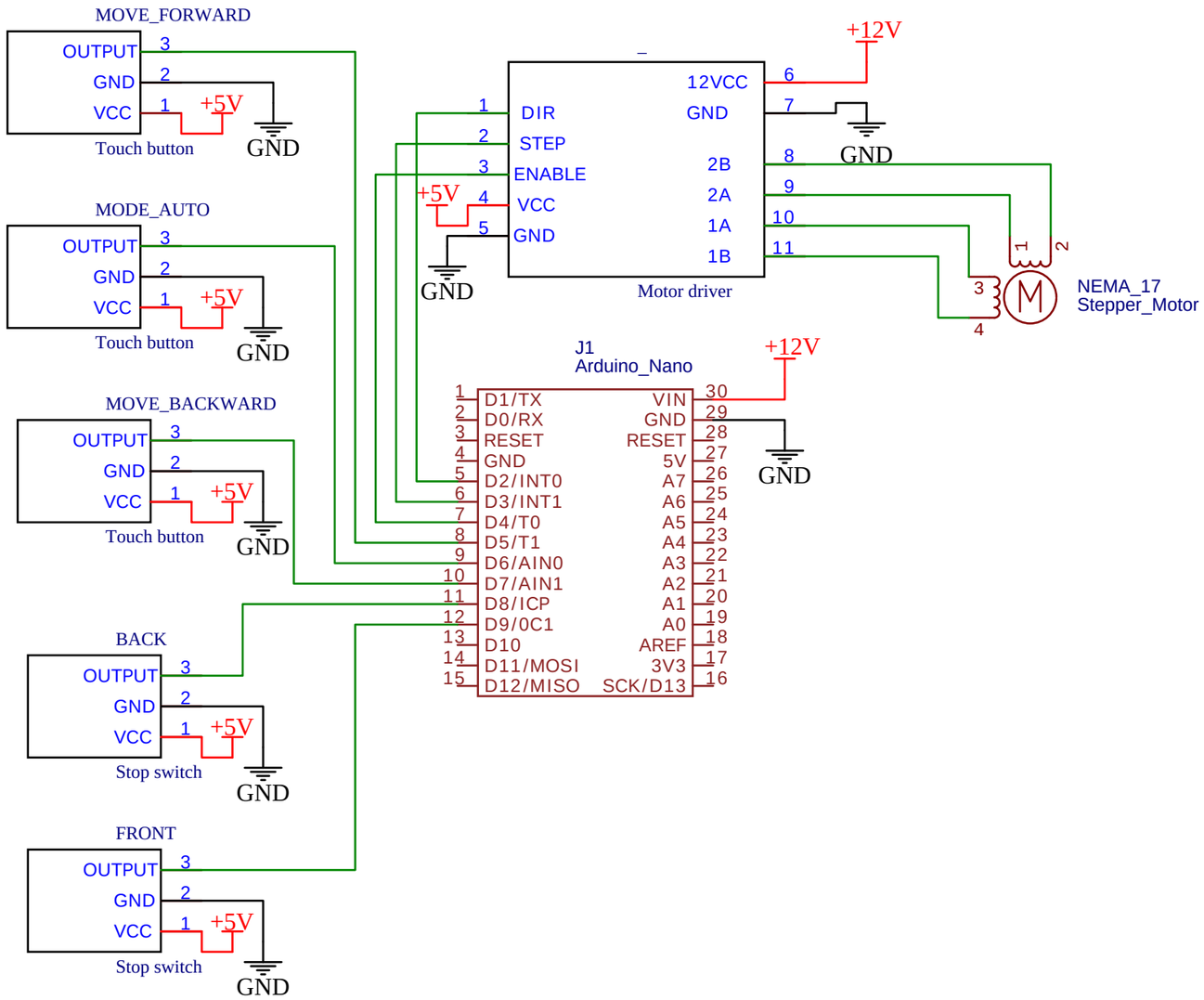

TITLE: Open Source Syringe Pump Schematic		REV: 1.0
EasyEDA	Company: None	Sheet: 1/1
	Date: 2021-06-21 Drawn By:	