Copyright (c) 2007
Green and Gold Energy Pty. Ltd.
All rights reserved.

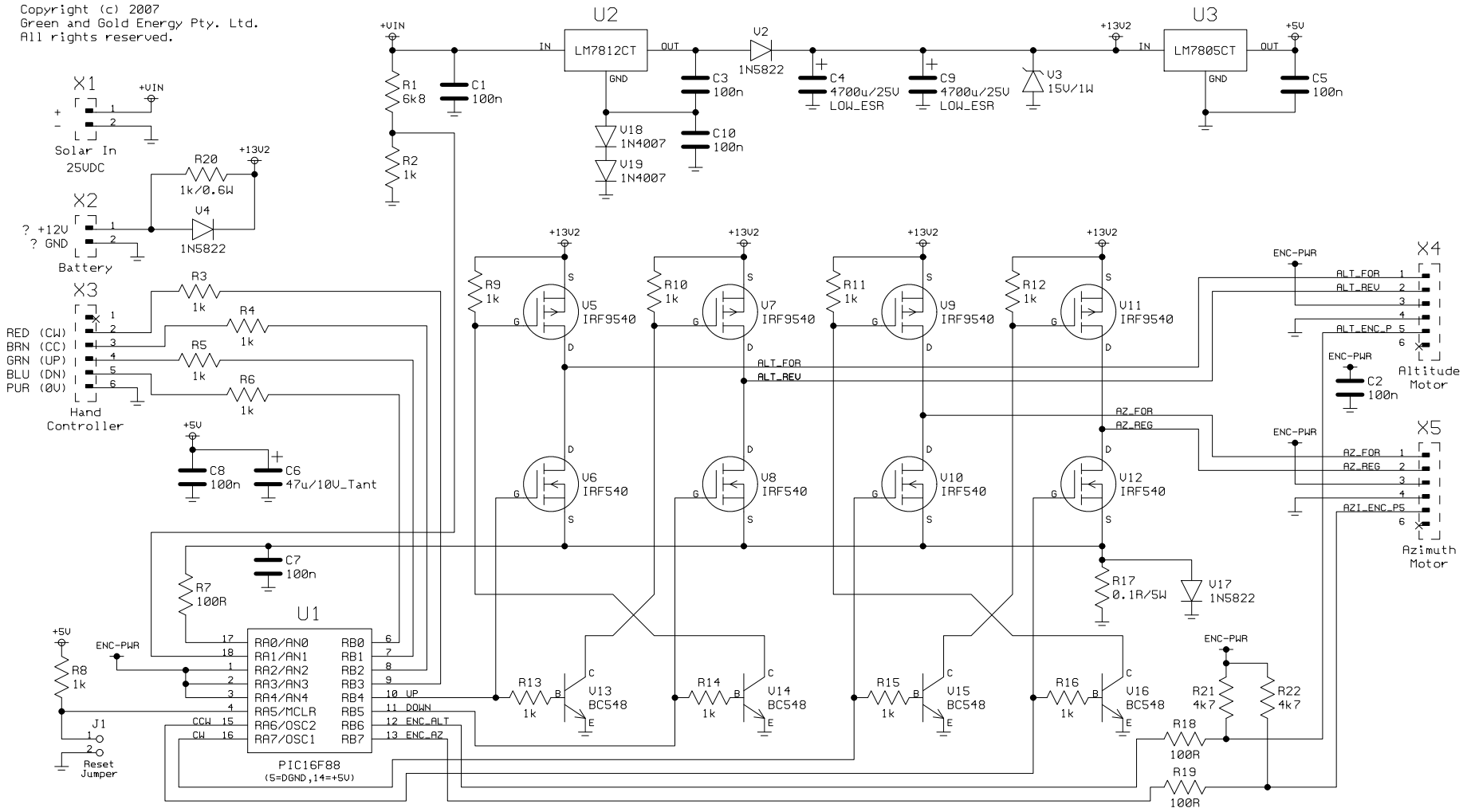

ZONE	REF	REV NO	BY	DATE	DRAWN: John Schultz	DATE: 13.12.07	Green and Gold Energy
					APPROVED:	DATE:	
					CAD FILE: SUN.SCH	ISSUE: REV 2	TITLE: Sun Cube Controller
					CONTRACTOR: ELECTRO CAD AUSTRALIA		
					PROJECT:	DRG NO:	SHEET 1 OF 1