REVISION HISTORY				
ZONE	REV	DESCRIPTION	DATE	APPROVED
	1		3/31/2009	jcs

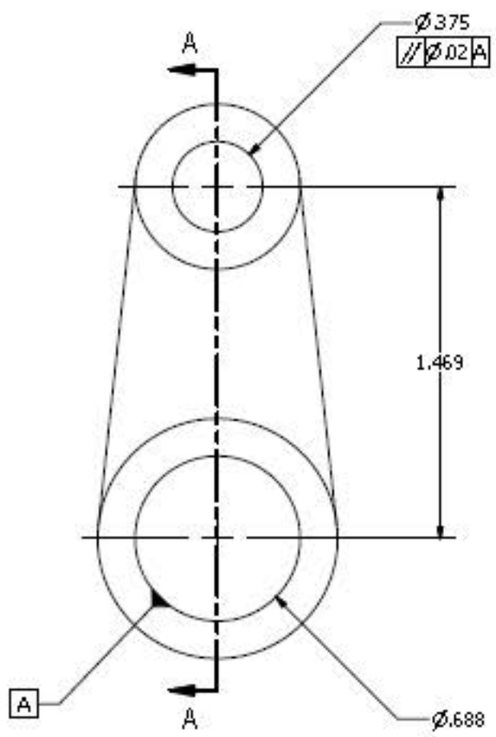

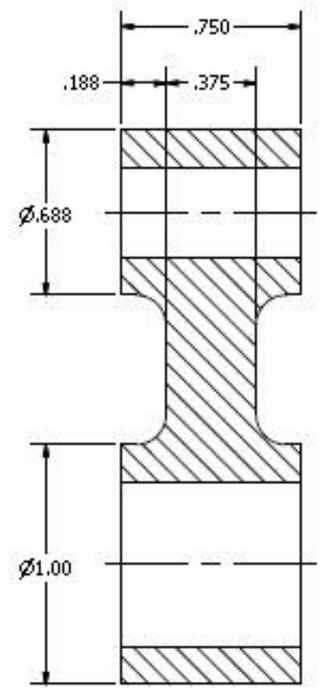

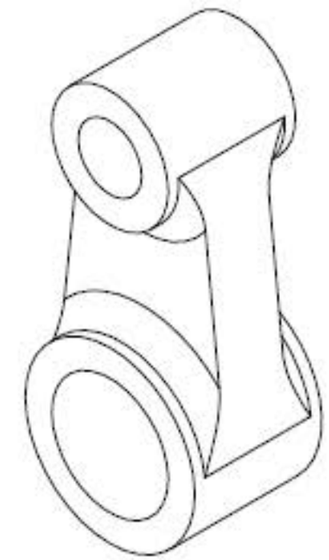

All Fillets = R.12

MATERIAL
Aluminum-6061

1. INTERPRET DIMENSIONS AND TOLERANCES PER ASME Y14.5M-1994
2. REMOVE ALL BURRS AND SHARP EDGES.

Unless otherwise specified
Inches

Unspecified Tolerances

Decimals	mm.	in.
x	±2.5	±.1
xx	±0.25	±.01
xxx	±0.125	±.005
Angular	±30'	
Finish	±3.2µm	±3.2µIN.

DRAWN jshahan	3/31/2009	Iowa State University
CHECKED		TITLE
QA		TSM 216 - GD/T Example
MFG		
APPROVED		SIZE C / DWG NO Shaft Beam / REV 1
		SCALE 2 : 1 / SHEET 1 OF 2

REVISION HISTORY				
ZONE	REV	DESCRIPTION	DATE	APPROVED
	1		3/31/2009	jcs

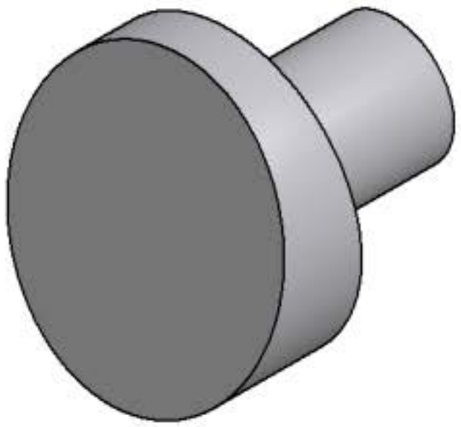

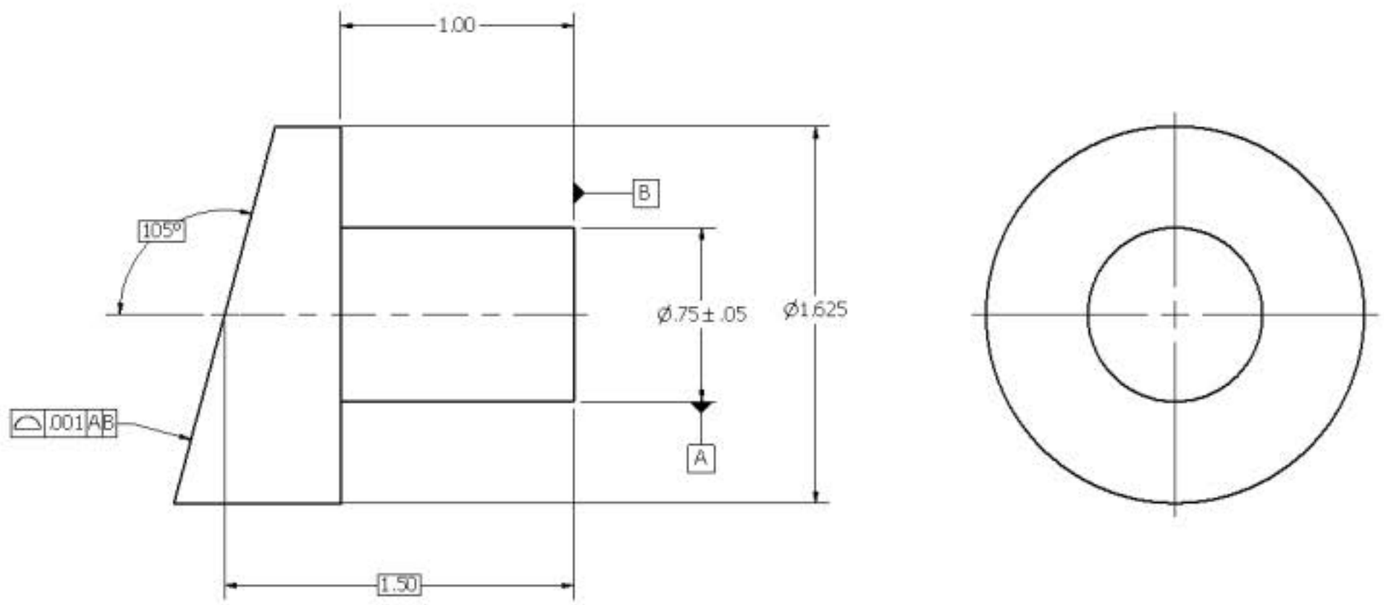

MATERIAL
Steel

1. INTERPRET DIMENSIONS AND TOLERANCES PER ASME Y14.5M-1994
2. REMOVE ALL BURRS AND SHARP EDGES.

Unless otherwise specified
Inches

Unspecified Tolerances

Decimals	mm.	in.
x	±2.5	±.1
xx	±0.25	±.01
xxx	±0.125	±.005
Angular	±30'	
Finish	±3.2μm	±3.2μIN.

DRAWN jshahan	3/31/2009	Iowa State University
CHECKED		TITLE TSM 216 - GD/T Example
QA		
MFG		
APPROVED		
		SIZE C · DWG NO Position Pin · REV 1
		SCALE 2 : 1 · SHEET 1 OF 1

REVISION HISTORY				
ZONE	REV	DESCRIPTION	DATE	APPROVED
	1		3/30/2009	

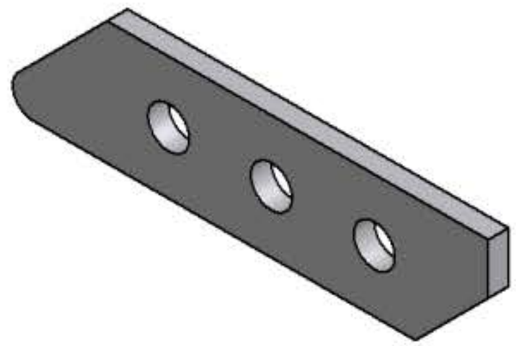

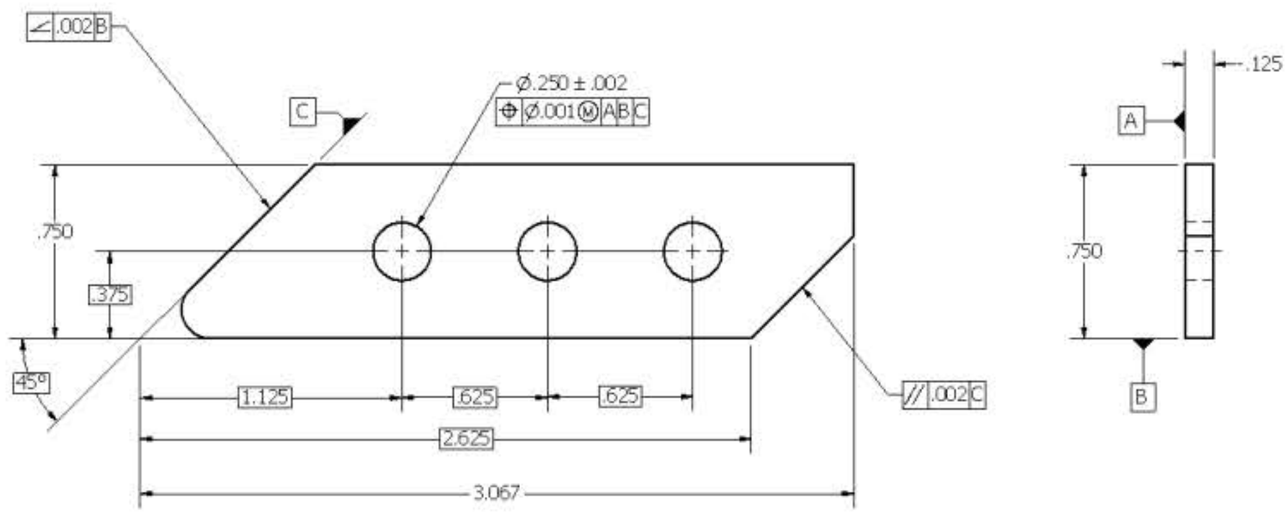

MATERIAL
Steel

1. INTERPRET DIMENSIONS AND TOLERANCES PER ASME Y14.5M-1994
2. REMOVE ALL BURRS AND SHARP EDGES.

Unless otherwise specified
Inches

Unspecified Tolerances

Decimals	mm.	in.
x	±2.5	±.1
xx	±0.25	±.01
xxx	±0.125	±.005
Angular	±30'	
Finish	±3.2μm	±3.2μIN.

DRAWN jcshahan	3/30/2009	Iowa State University
CHECKED		TITLE
QA		TSM 216 - GD/T Example
MFG		
APPROVED		
		SIZE C · DWG NO Steering Arm Stop · REV 1
		SCALE 2 : 1 · SHEET 1 OF 2

REVISION HISTORY				
ZONE	REV	DESCRIPTION	DATE	APPROVED
	1		3/31/2009	jcs

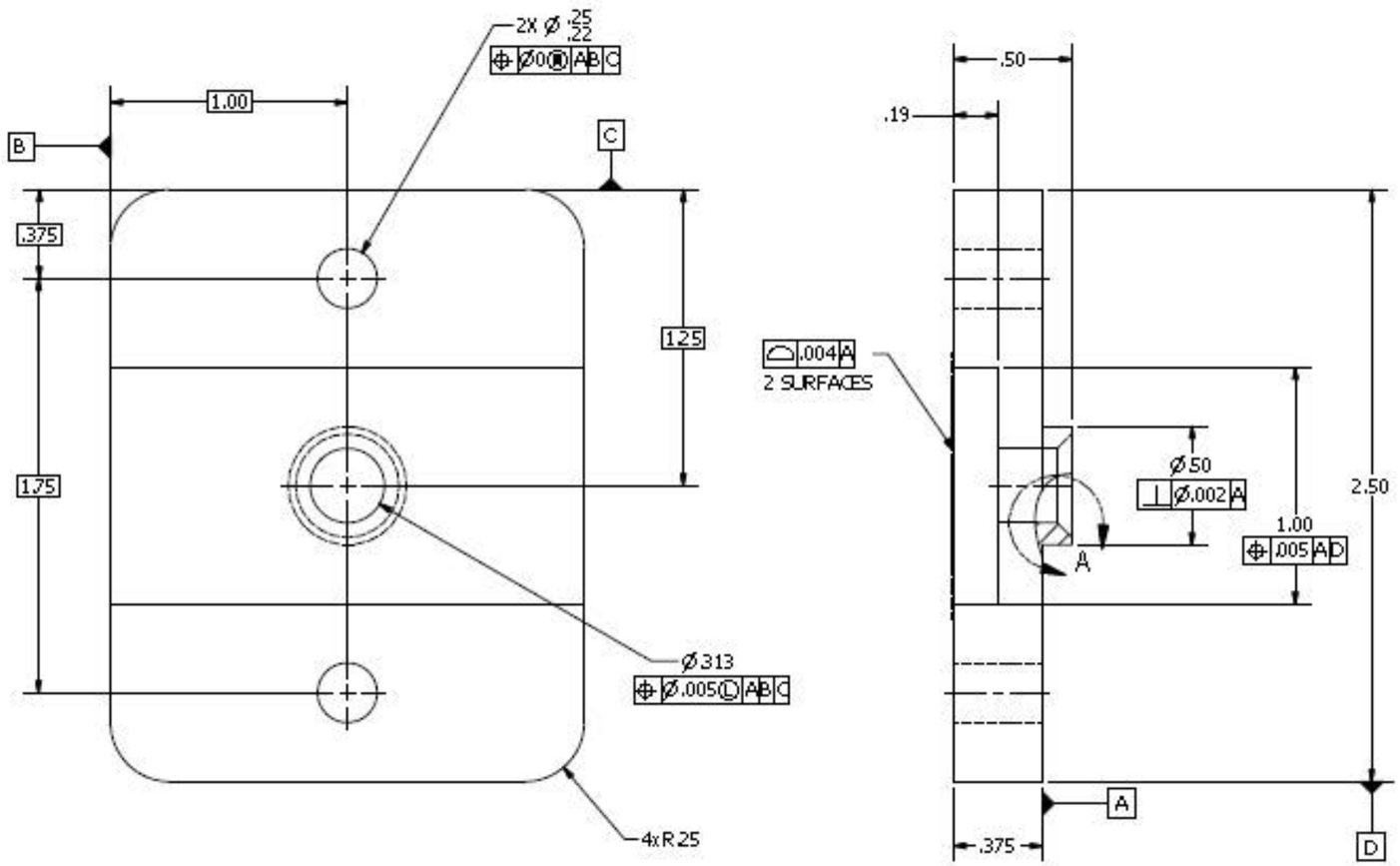

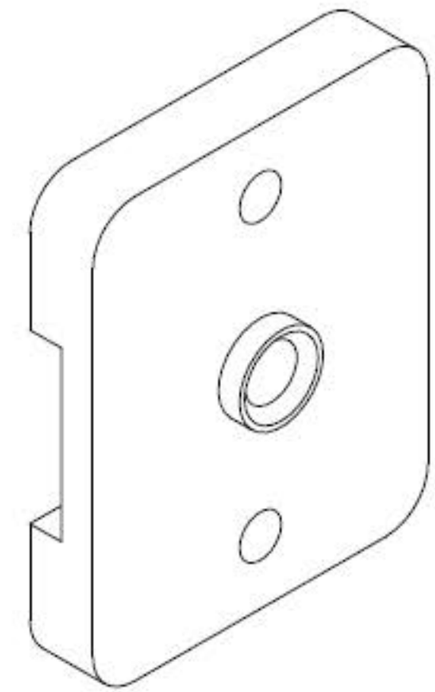

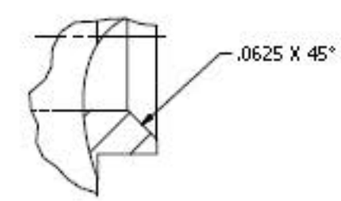

DETAIL A
SCALE 4 : 1

MATERIAL
Steel

1. INTERPRET DIMENSIONS AND TOLERANCES PER ASME Y14.5M-1994
2. REMOVE ALL BURRS AND SHARP EDGES.

Unless otherwise specified
Inches

Unspecified Tolerances

Decimals	mm.	in.
x	±2.5	±.1
xx	±0.25	±.01
xxx	±0.125	±.005
Angular	±30'	
Finish	±3.2μm	±3.2μIN.

DRAWN jshahan	3/31/2009	Iowa State University
CHECKED		TITLE TSM 216 - GD/T Example
QA		
MFG		
APPROVED		
		SIZE C · DWG NO Flush Plate · REV 1
		SCALE 2 : 1 · SHEET 1 OF 2