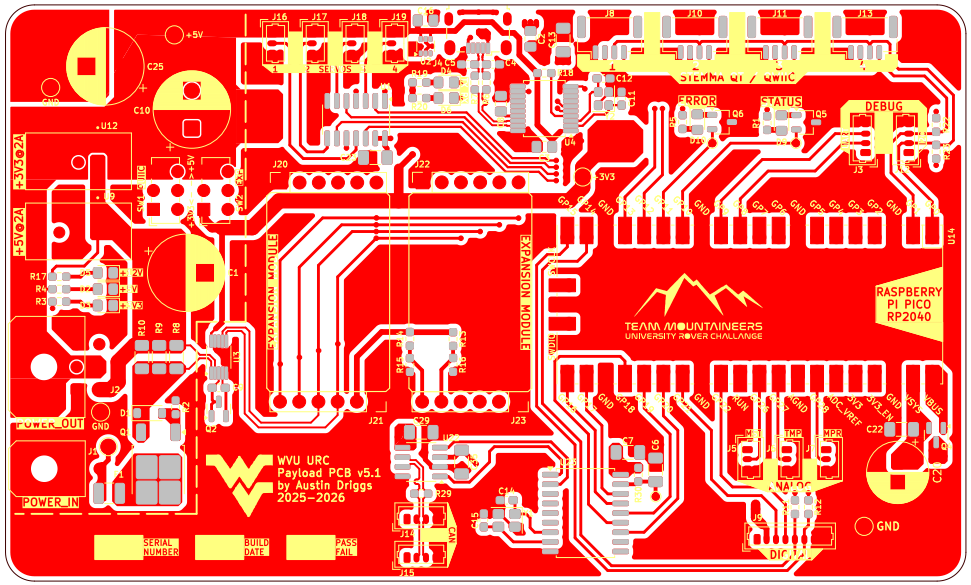

Board2Pdf: Colored TOP – Page 1/3

WVU Unviersity Rover Challenge (URC)

Sheet: Colored TOP
File: payload-pcb.kicad_pcb

Title: Payload PCB

Size: A4	Date: 2026-01-03	**Rev: v5.1**
KiCad E.D.A. 9.0.4		Id: /1

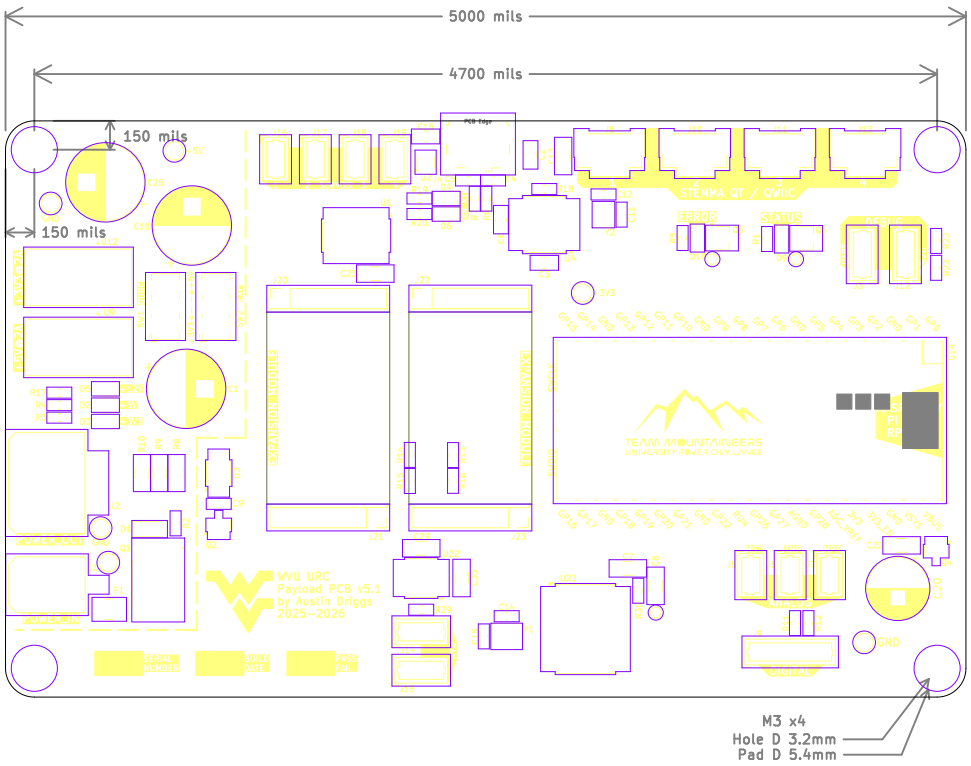

Board2Pdf: Drawing TOP – Page 2/3

WVU Unviersity Rover Challenge (URC)

Sheet: Drawing TOP
File: payload-pcb.kicad_pcb

Title: Payload PCB

Size: A4	Date: 2026-01-03	**Rev: v5.1**
KiCad E.D.A. 9.0.4		Id: /1

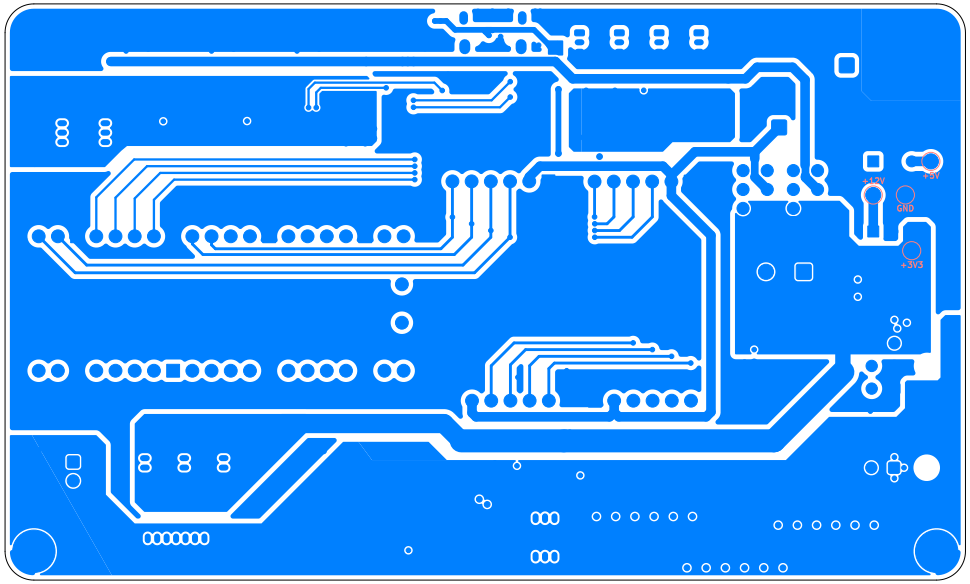

Board2Pdf: Colored BOT – Page 3/3

WVU Unviersity Rover Challenge (URC)

Sheet: Colored BOT
File: payload–pcb.kicad_pcb

Title: Payload PCB

Size: A4	Date: 2026–01–03	**Rev: v5.1**
KiCad E.D.A. 9.0.4		Id: /1