Payload PCB

by Austin Driggs
2025–2026

Power

File: power.kicad_sch

Pi Pico

File: pico.kicad_sch

USB

File: usb.kicad_sch

GPIO

File: gpio.kicad_sch

CAN

File: can.kicad_sch

WVU Unviersity Rover Challenge (URC)

Sheet: /
File: payload-pcb.kicad_sch

Title: Payload PCB

Size: A4	Date: 2026-01-03	**Rev: v5.1**
KiCad E.D.A. 9.0.6		Id: 1/6

POWER INPUT AND PROTECTION

Resettable PTC fuse and reverse voltage protection.

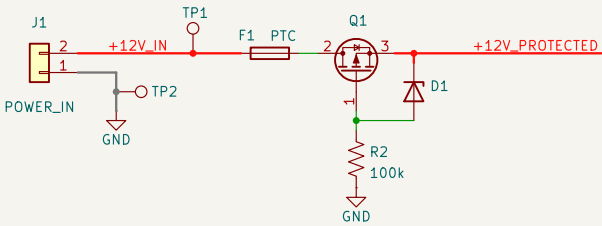

CURRENT AND TEMPERATURE MONITOR

Quad I2C Voltage, Current, and Temperature Monitor

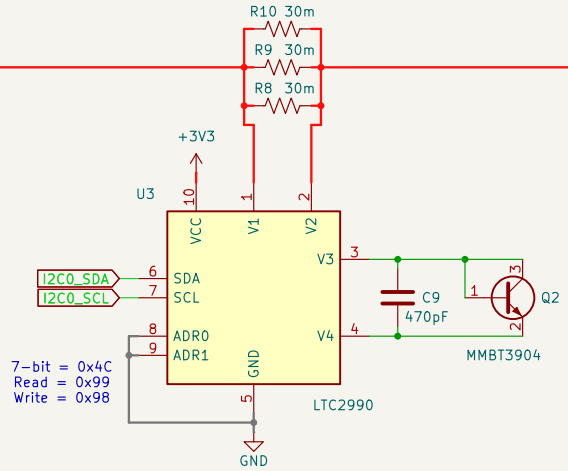

BULK CAPACITOR

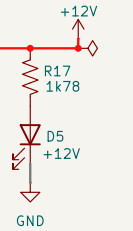

VOLTAGE REGULATORS

96% eff, no heat sink required, built in filter caps, and short circuit protection.

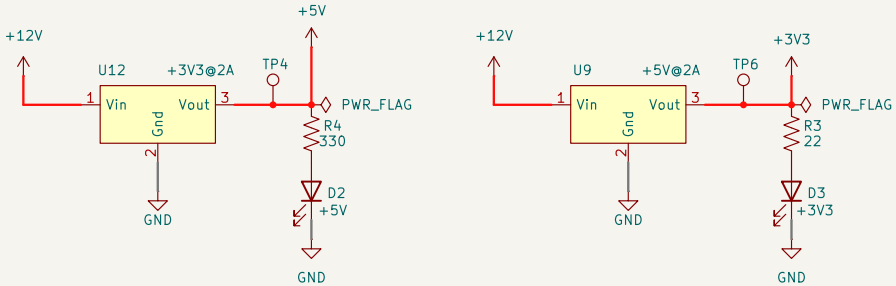

POWER OUTPUT

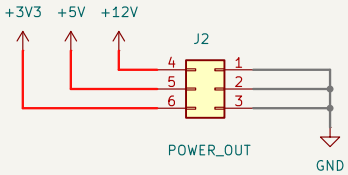

TEST POINTS

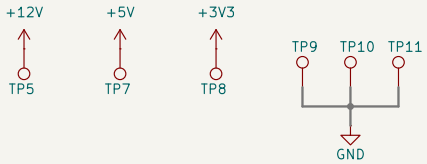

WVU Unviersity Rover Challenge (URC)

Sheet: /Power/
File: power.kicad_sch

Title: Power

Size: A4	Date: 2026-01-03	**Rev: v5.1**
KiCad E.D.A. 9.0.6		Id: 2/6

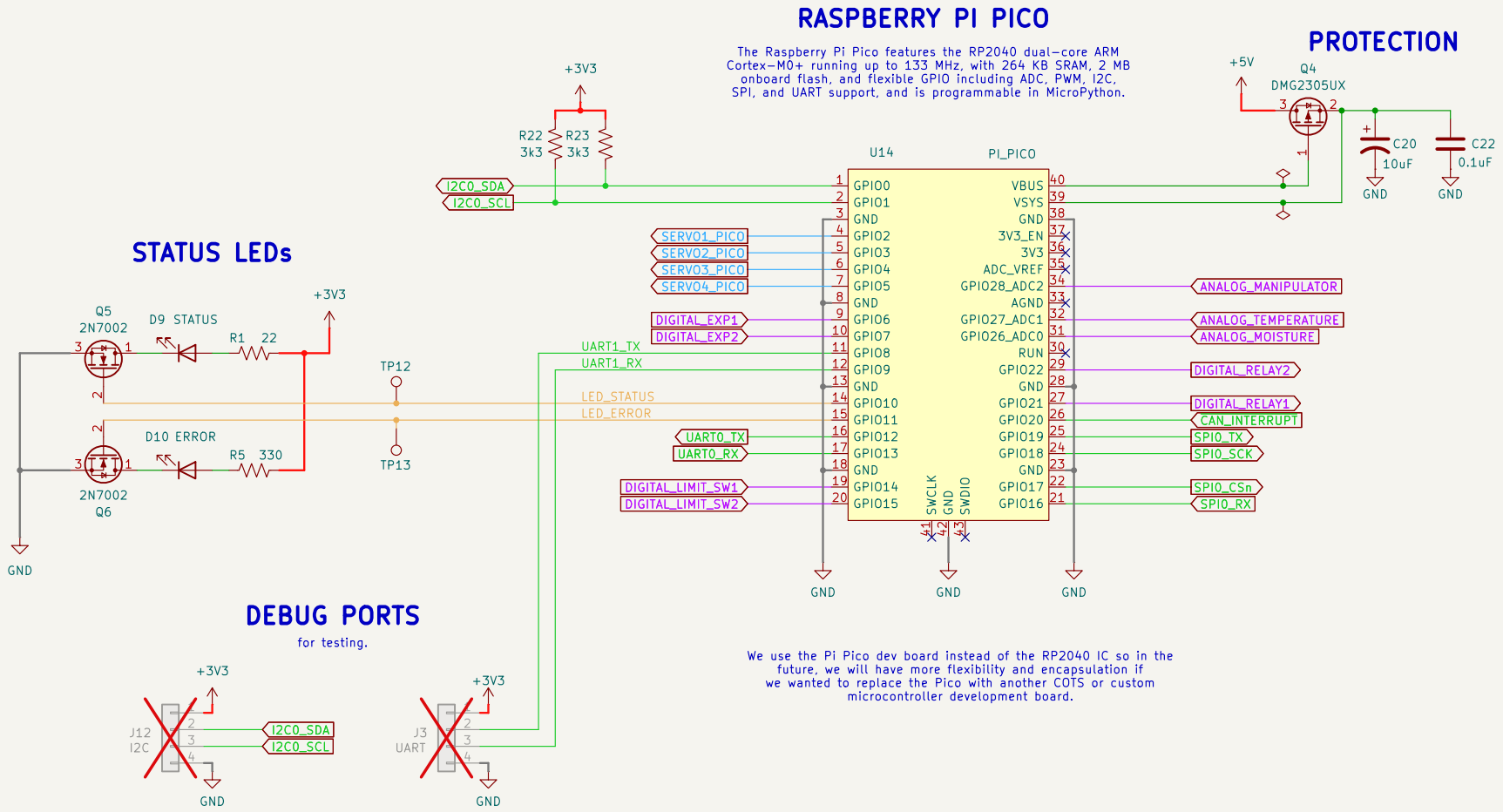

WVU Unviersity Rover Challenge (URC)

Sheet: /Pi Pico/
File: pico.kicad_sch

Title: Pi Pico

Size: A4	Date: 2026-01-03	**Rev: v5.1**
KiCad E.D.A. 9.0.6		Id: 3/6

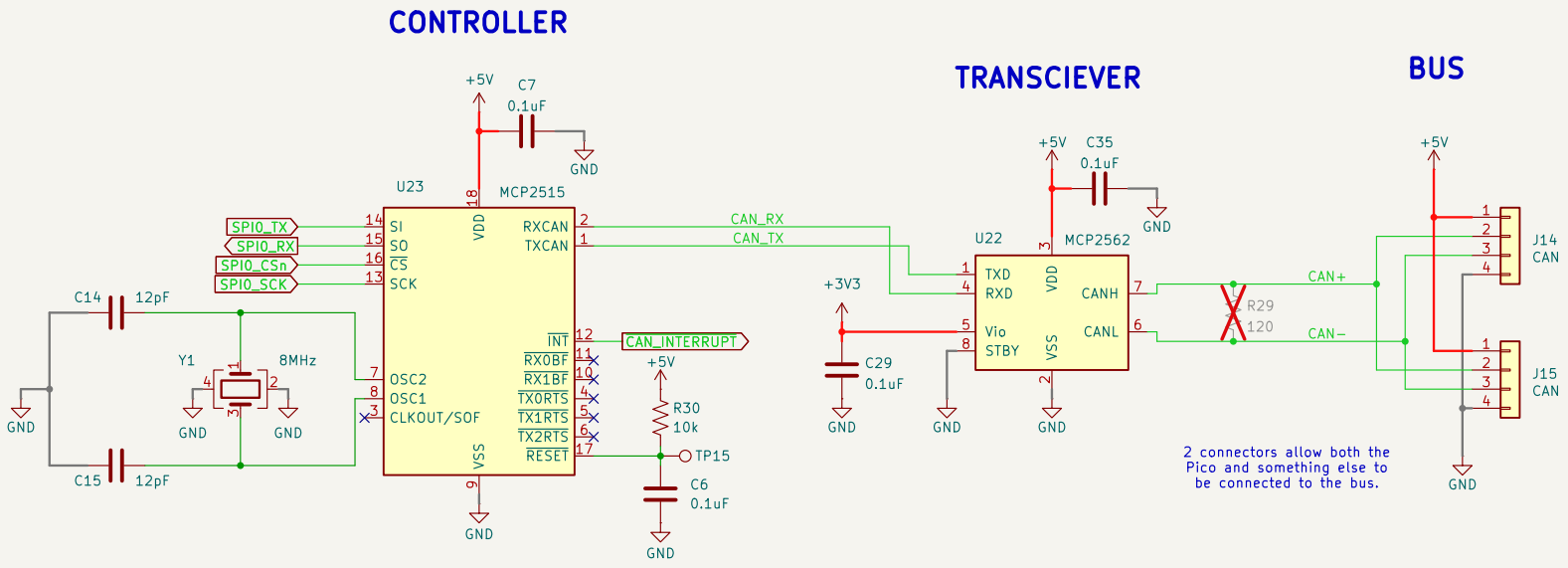

WVU Unviersity Rover Challenge (URC)

Sheet: /CAN/

File: can.kicad_sch

Title: CAN

Size: A4	Date: 2026-01-03	Rev: v5.1
KiCad E.D.A. 9.0.6		Id: 4/6

STEMMA QT / QWIIC MODULES

Standardized 4-pin I2C connectors that allow easy, solder-free chaining of off-the-shelf sensors and peripherals.

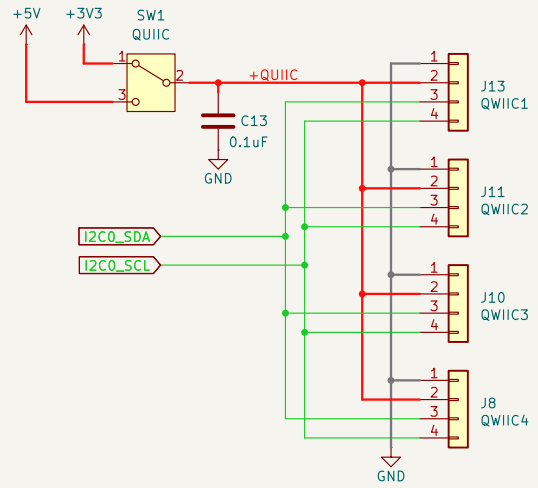

ANALOG SENSORS

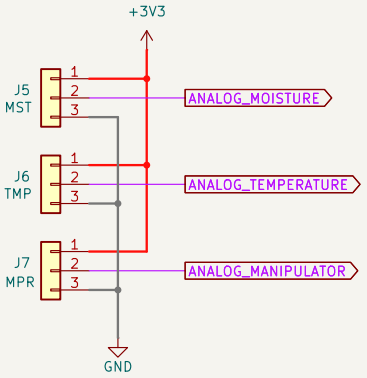

DIGITAL IO

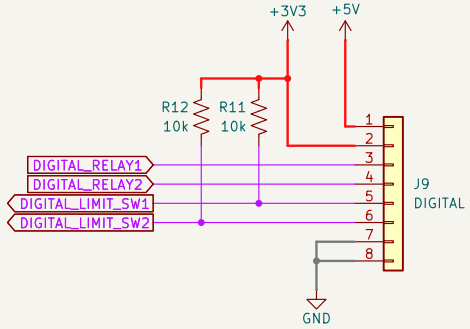

CUSTOM EXPANSION MODULES

Optional room for custom modules developed in house for flexibility and future-proofing.

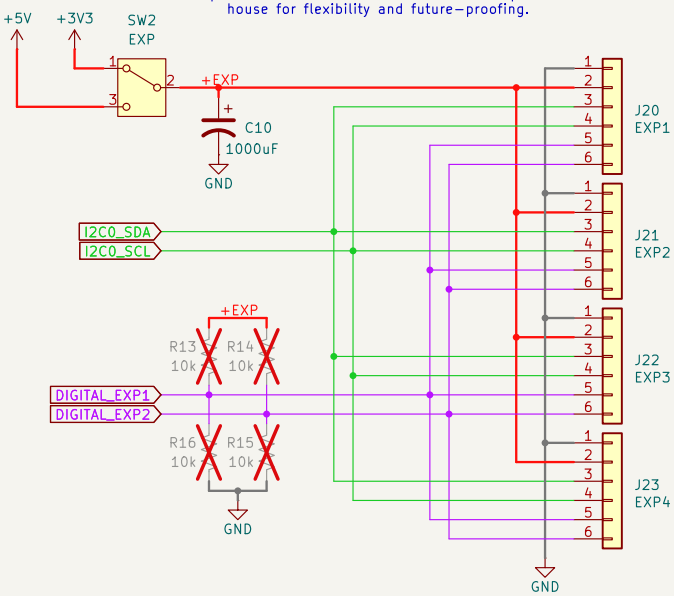

SERVO BUFFER AND CONNECTIONS

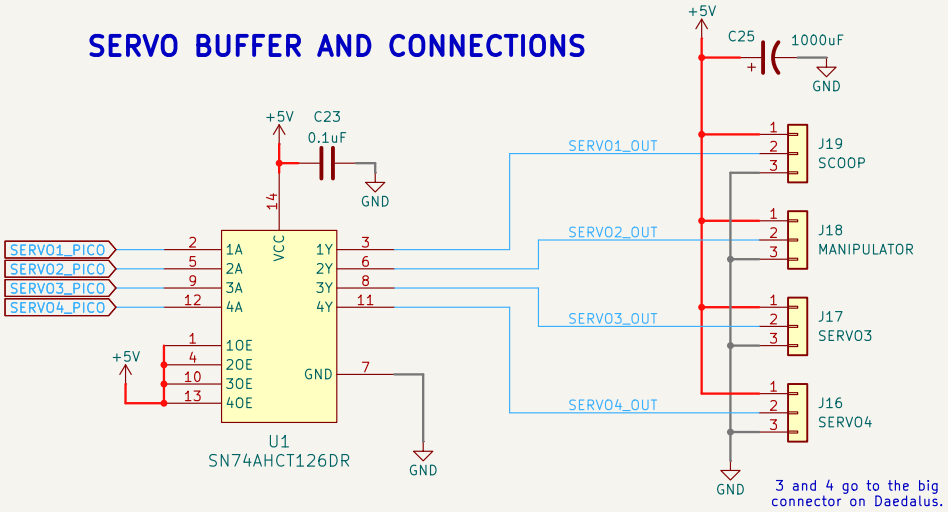

WVU Unviersity Rover Challenge (URC)		
Sheet: /GPIO/		
File: gpio.kicad_sch		
Title: GPIO		
Size: A4	Date: 2026-01-03	**Rev: v5.1**
KiCad E.D.A. 9.0.6		Id: 6/6

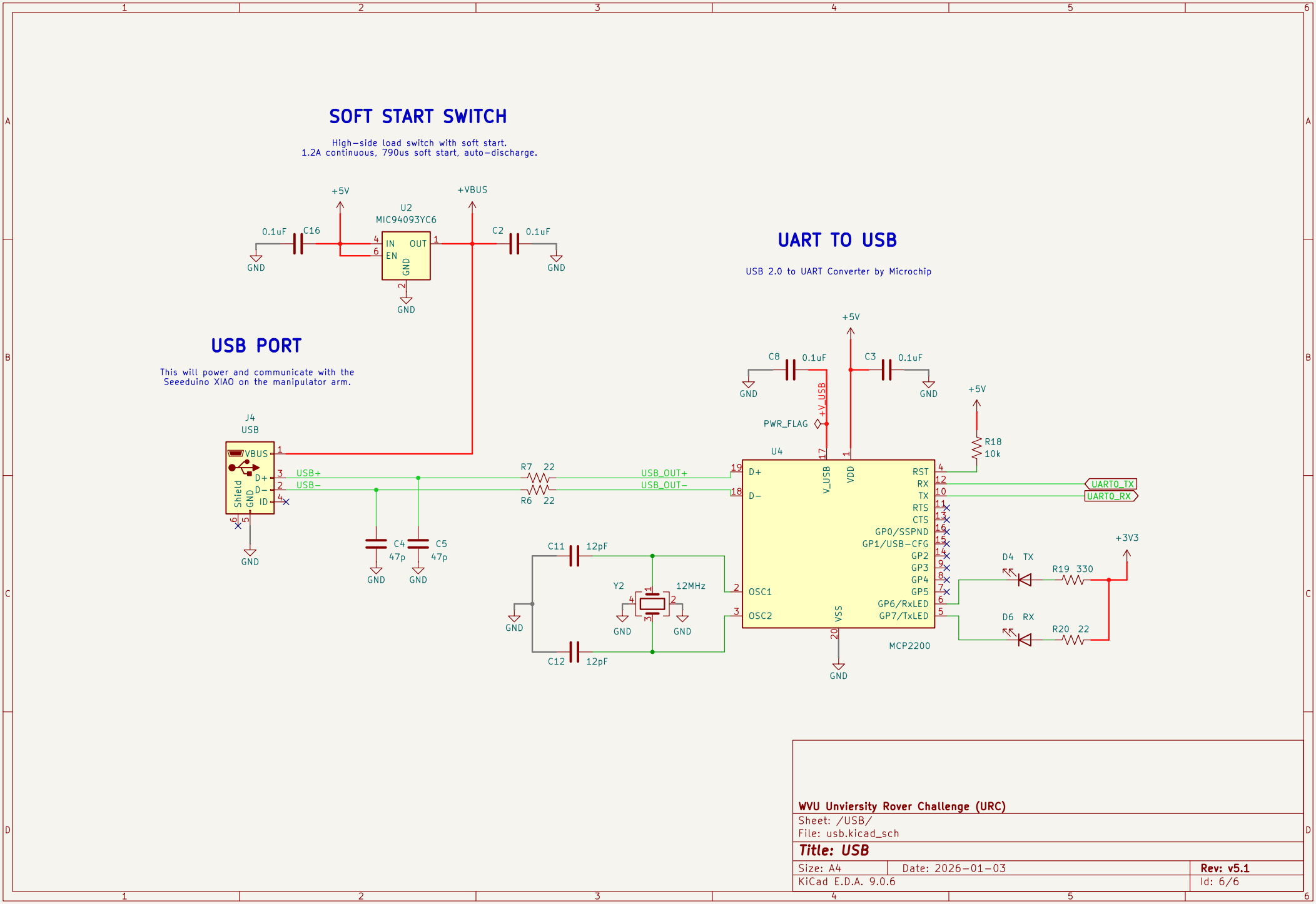

WVU Unviersity Rover Challenge (URC)	
Sheet: /USB/	
File: usb.kicad_sch	
Title: USB	
Size: A4	Date: 2026-01-03	Rev: v5.1
KiCad E.D.A. 9.0.6	Id: 6/6