Payload PCB

by Austin Driggs
2025–2026

Power

File: power.kicad_sch

Pi Pico

File: pico.kicad_sch

USB

File: usb.kicad_sch

GPIO

File: gpio.kicad_sch

CAN

File: can.kicad_sch

WVU Unviersity Rover Challenge (URC)

Sheet: /
File: payload-pcb.kicad_sch

Title: Payload PCB

Size: A4	Date: 2026-01-03	**Rev: v5.1**
KiCad E.D.A. 9.0.4		Id: 1/6

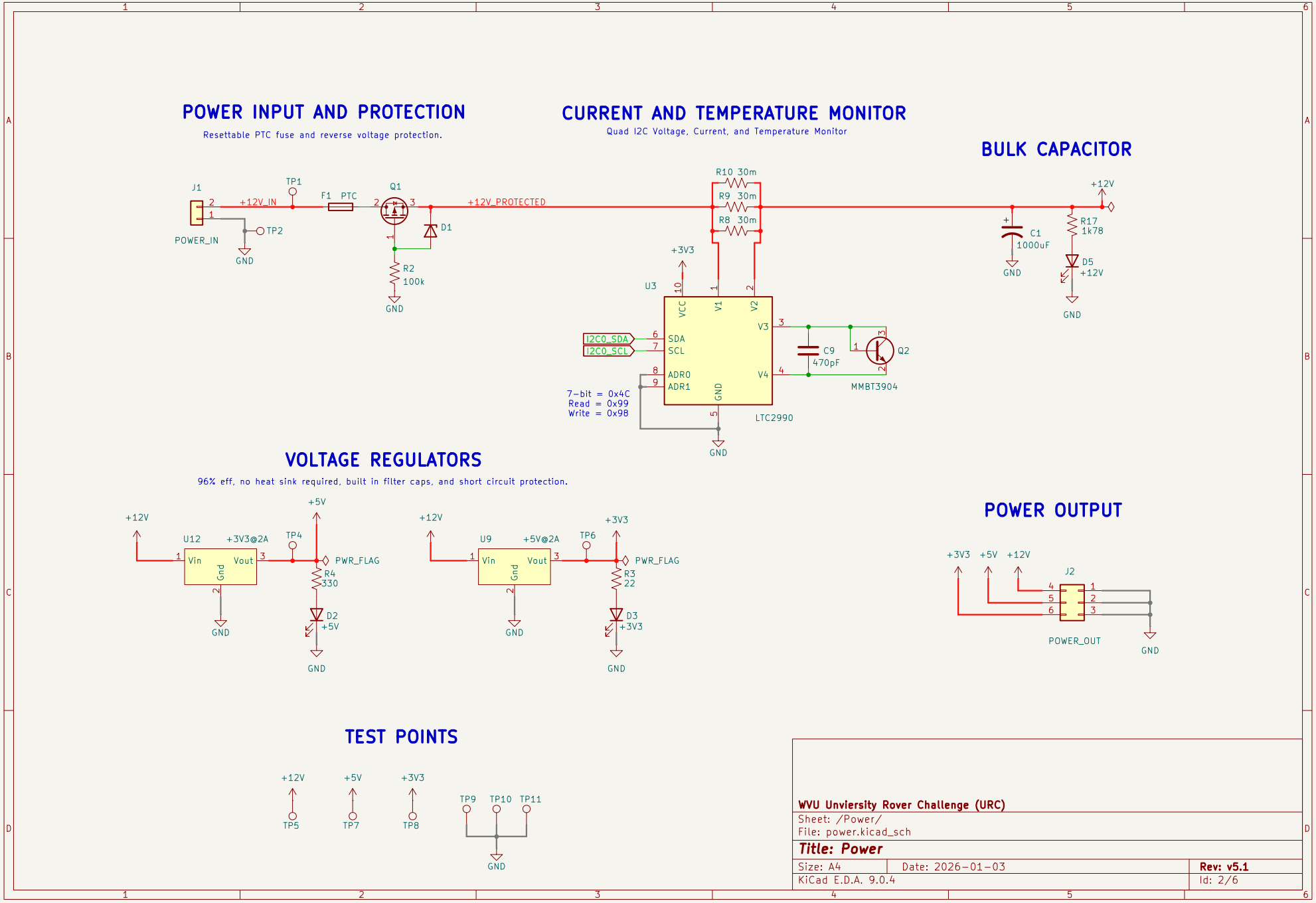

WVU Unviersity Rover Challenge (URC)

Sheet: /Power/

File: power.kicad_sch

Title: Power

Size: A4	Date: 2026-01-03	Rev: v5.1
KiCad E.D.A. 9.0.4		Id: 2/6

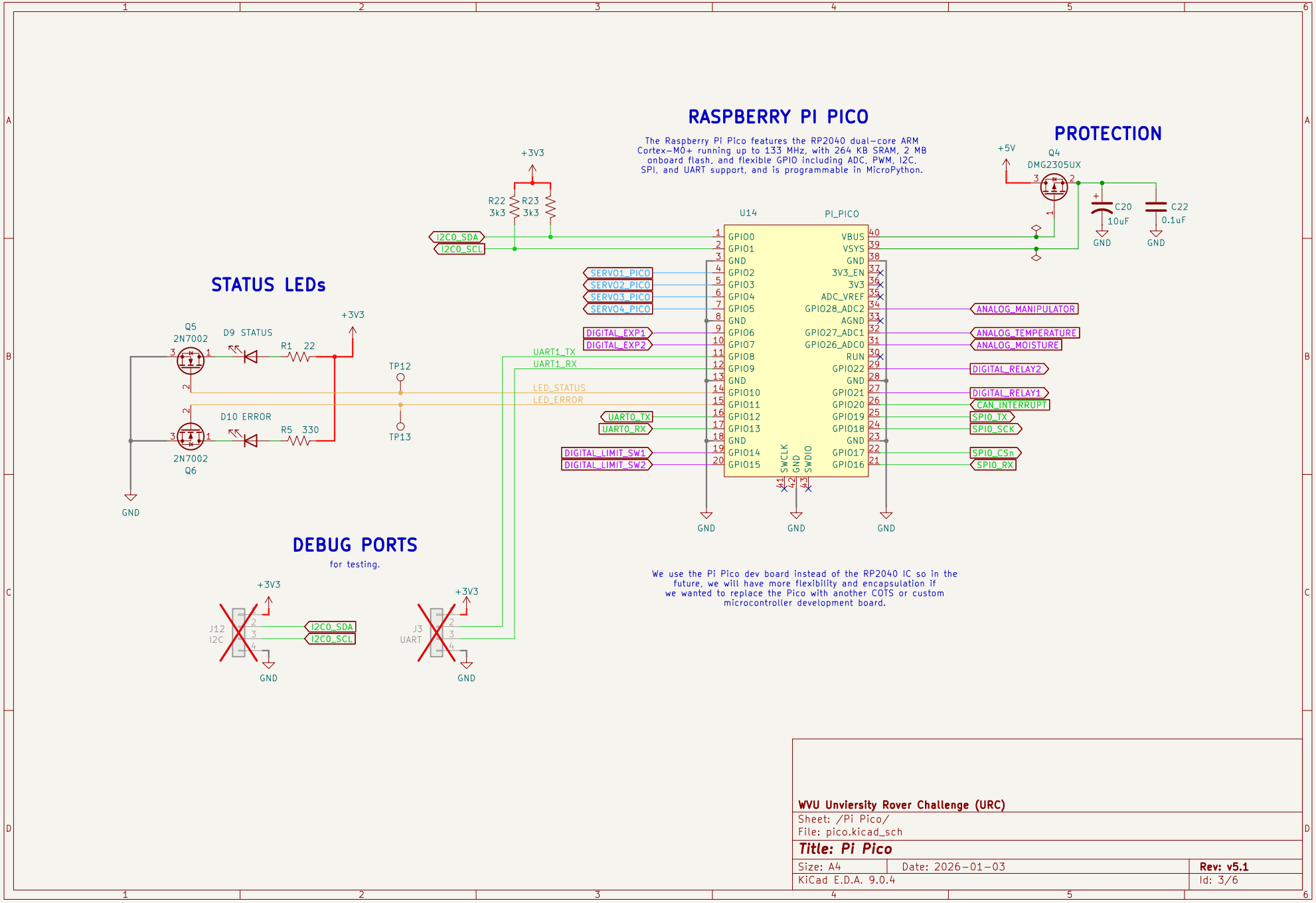

WVU Unviersity Rover Challenge (URC)

Sheet: /Pi Pico/

File: pico.kicad_sch

Title: Pi Pico

Size: A4	Date: 2026-01-03	**Rev: v5.1**
KiCad E.D.A. 9.0.4		Id: 3/6

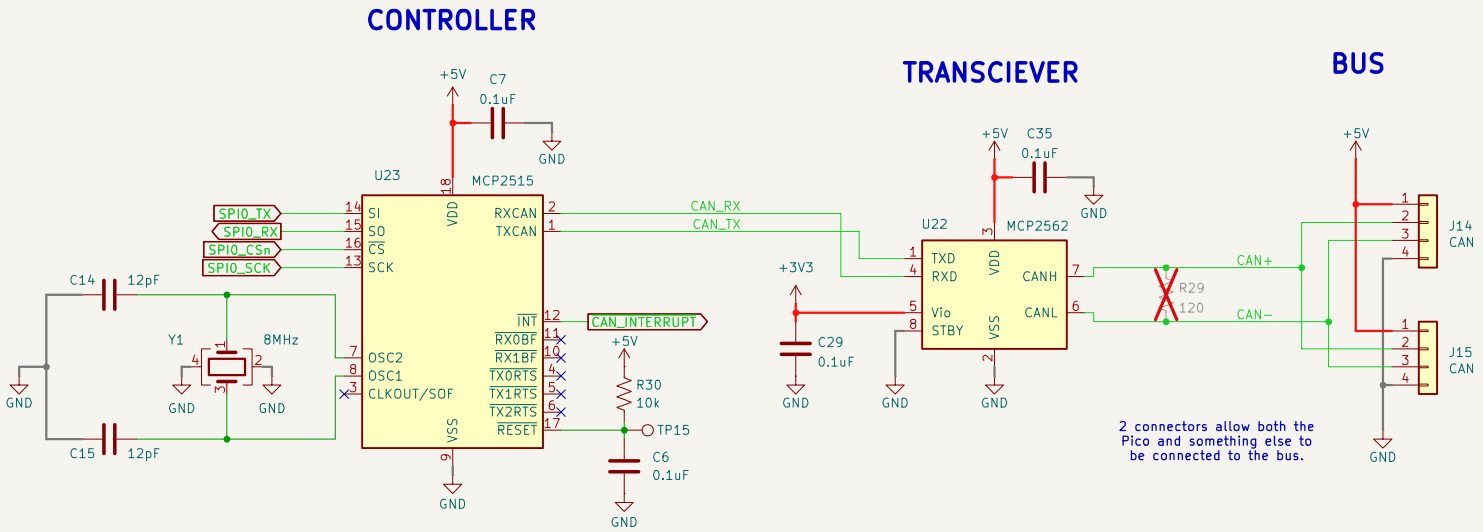

WVU Unviersity Rover Challenge (URC)

Sheet: /CAN/

File: can.kicad_sch

Title: CAN

Size: A4	Date: 2026-01-03	**Rev: v5.1**
KiCad E.D.A. 9.0.4		Id: 4/6

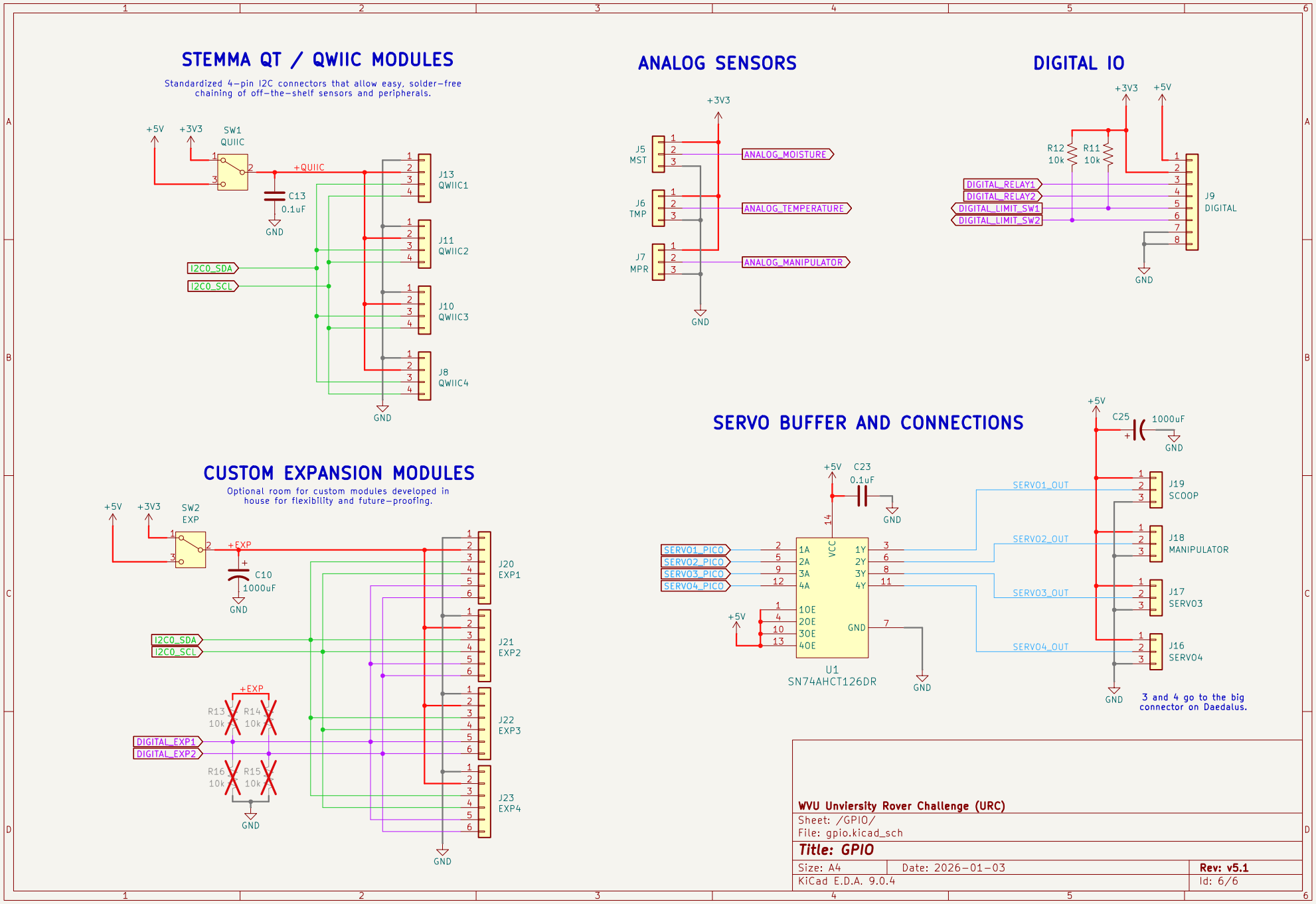
STEMMA QT / QWIIC MODULES
Standardized 4-pin I2C connectors that allow easy, solder-free chaining of off-the-shelf sensors and peripherals.
+5V
+3V3
SW1
QUIIC
+QUIIC
C13
0.1uF
GND
I2C0_SDA
I2C0_SCL
J13
QWIIC1
J11
QWIIC2
J10
QWIIC3
J8
QWIIC4
ANALOG SENSORS
+3V3
J5
MST
J6
TMP
J7
MPR
ANALOG_MOISTURE
ANALOG_TEMPERATURE
ANALOG_MANIPULATOR
GND
DIGITAL IO
+3V3
+5V
R12
10k
R11
10k
DIGITAL_RELAY1
DIGITAL_RELAY2
DIGITAL_LIMIT_SW1
DIGITAL_LIMIT_SW2
J9
DIGITAL
GND
CUSTOM EXPANSION MODULES
Optional room for custom modules developed in house for flexibility and future-proofing.
+5V
+3V3
SW2
EXP
+EXP
C10
1000uF
GND
I2C0_SDA
I2C0_SCL
R13
10k
R14
10k
R16
10k
R15
10k
DIGITAL_EXP1
DIGITAL_EXP2
J20
EXP1
J21
EXP2
J22
EXP3
J23
EXP4
SERVO BUFFER AND CONNECTIONS
+5V
C23
0.1uF
C25
1000uF
SERVO1_PICO
SERVO2_PICO
SERVO3_PICO
SERVO4_PICO
VCC
1A
2A
3A
4A
1Y
2Y
3Y
4Y
10E
20E
30E
40E
U1
SN74AHCT126DR
SERVO1_OUT
SERVO2_OUT
SERVO3_OUT
SERVO4_OUT
J19
SCOOP
J18
MANIPULATOR
J17
SERVO3
J16
SERVO4
3 and 4 go to the big connector on Daedalus.
WVU Unviersity Rover Challenge (URC)
Sheet: /GPIO/
File: gpio.kicad_sch
Title: GPIO
Size: A4
Date: 2026-01-03
Rev: v5.1
KiCad E.D.A. 9.0.4
Id: 6/6

USB PORT

This will power and communicate with the
Seeeduino XIAO on the manipulator arm.

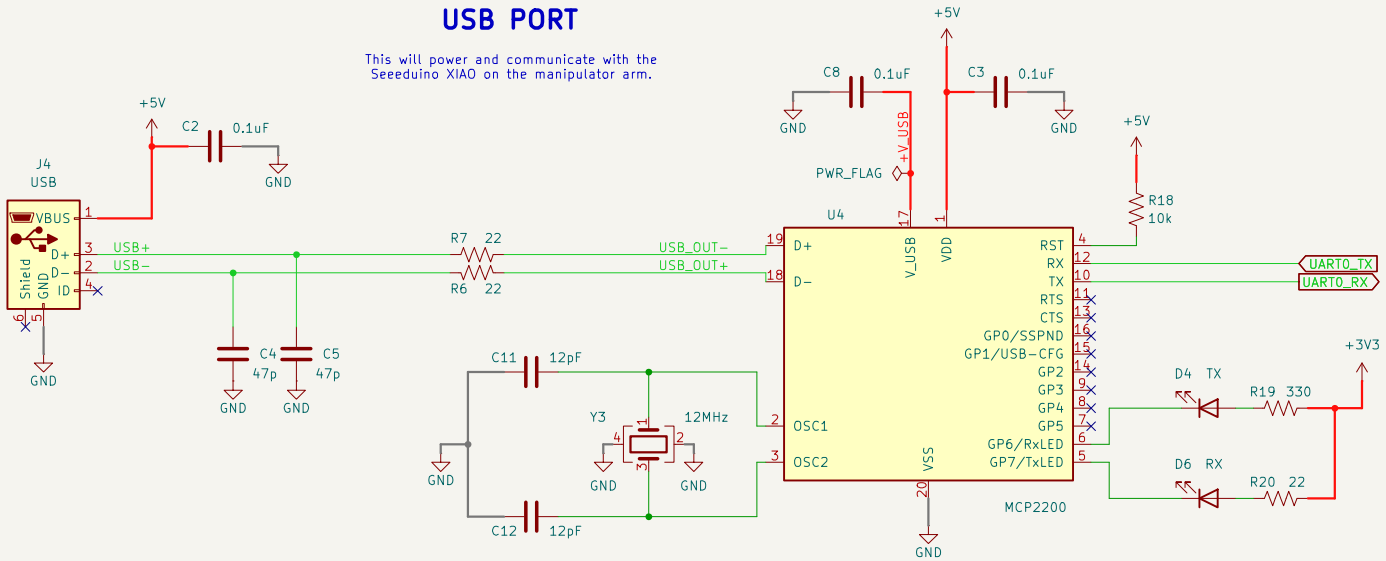

WVU Unviersity Rover Challenge (URC)

Sheet: /USB/
File: usb.kicad_sch

Title: USB

Size: A4	Date: 2026-01-03	**Rev: v5.1**
KiCad E.D.A. 9.0.4		Id: 6/6