COMBINATIONAL LOGIC; GATES, HALF ADDER, FULL ADDERS, & MULTIPLEXERS

Ayman Hajja, PhD

COMBINATIONAL LOGIC SYMBOLS; NOT

Boolean operator with only one variable that has the value one when the variable is zero and vice-versa

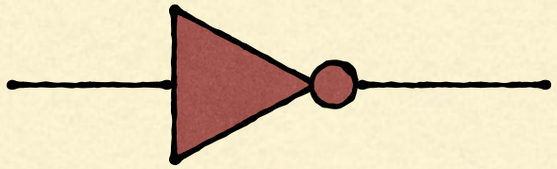

NOT Truth Table

A	~A
1	0
0	1

COMBINATIONAL LOGIC SYMBOLS; OR

Boolean operator that gives the value one if at least one operand (or input) has a value of one, and otherwise has a value of zero.

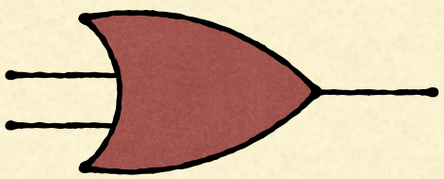

OR Truth Table

A	B	A + B
1	1	1
1	0	1
0	1	1
0	0	0

COMBINATIONAL LOGIC SYMBOLS; AND

Boolean operator that gives the value one if and only if all the operands are one, and otherwise has a value of zero.

AND Truth Table

A	B	A . B
1	1	1
1	0	0
0	1	0
0	0	0

MORE GATE COMBINATIONS

- Recall that the AND gate has two inputs and one output. If we needed to draw A . B . C we would do the following;

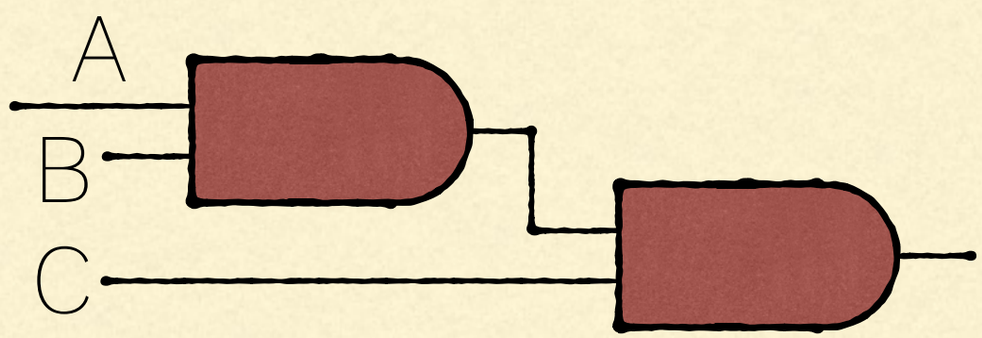

MORE GATE COMBINATIONS

- Recall that the AND gate has two inputs and one output. If we needed to draw A . B . C we would do the following;

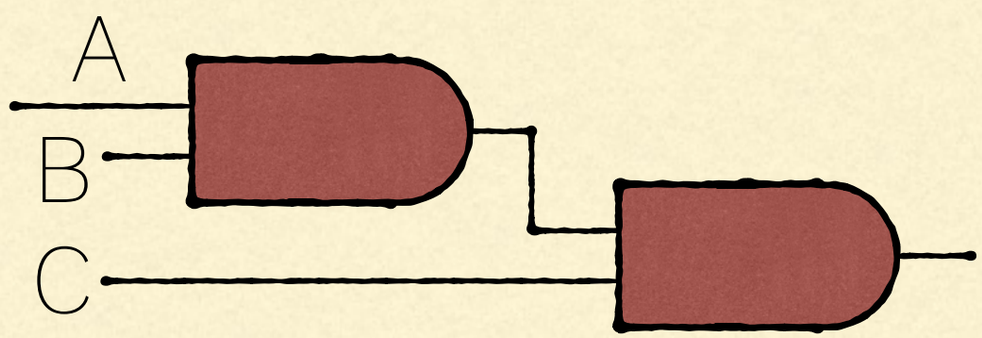

- The above combination can simply be drawn like the diagram below;

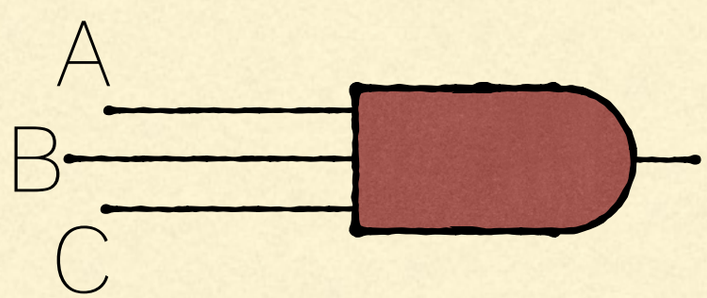

COMBINATIONAL LOGIC SYMBOLS; EXCLUSIVE OR

- What is this gate?

P	Q	Z
1	0	1
1	1	0
0	0	0
0	1	1

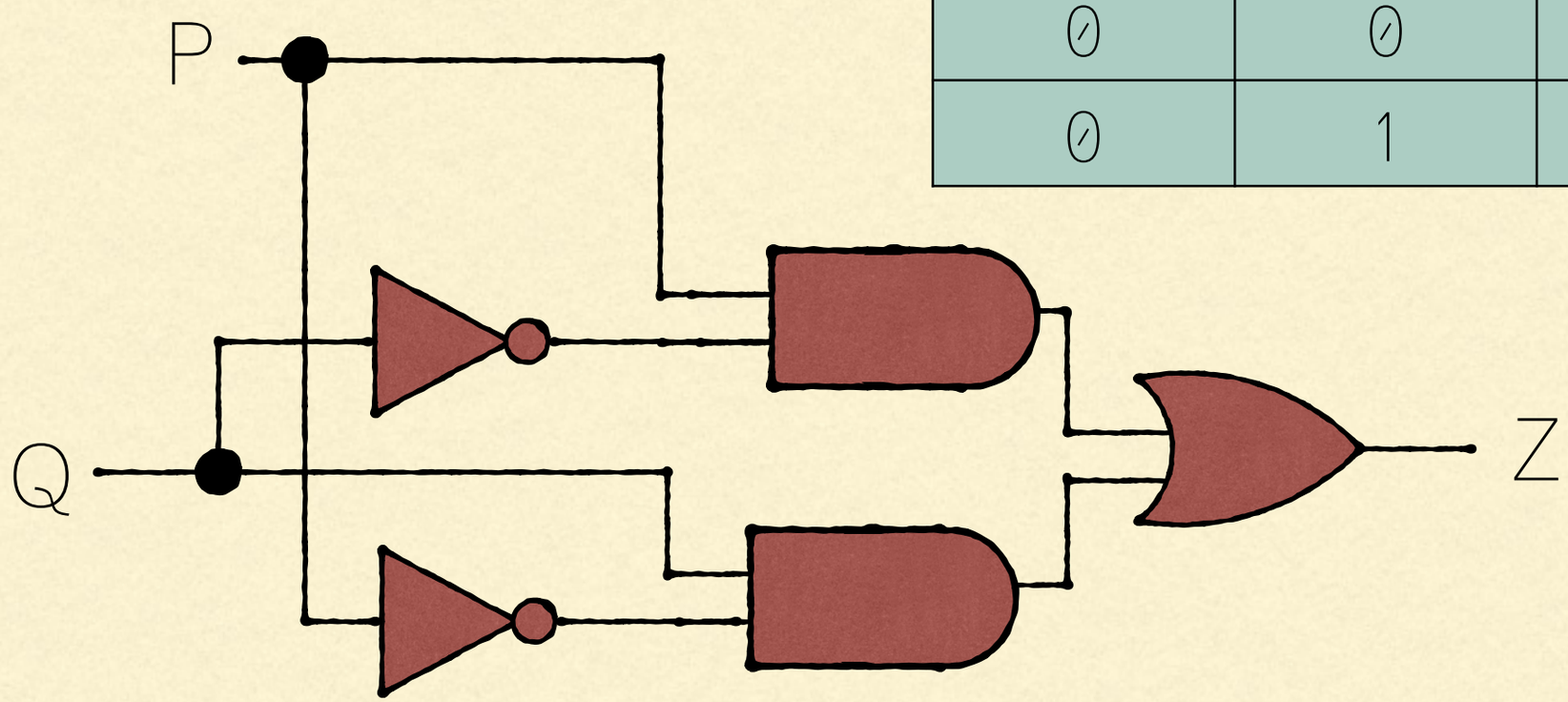

COMBINATIONAL LOGIC SYMBOLS; EXCLUSIVE OR

- What is this gate?

Exclusive Or

P	Q	Z
1	0	1
1	1	0
0	0	0
0	1	1

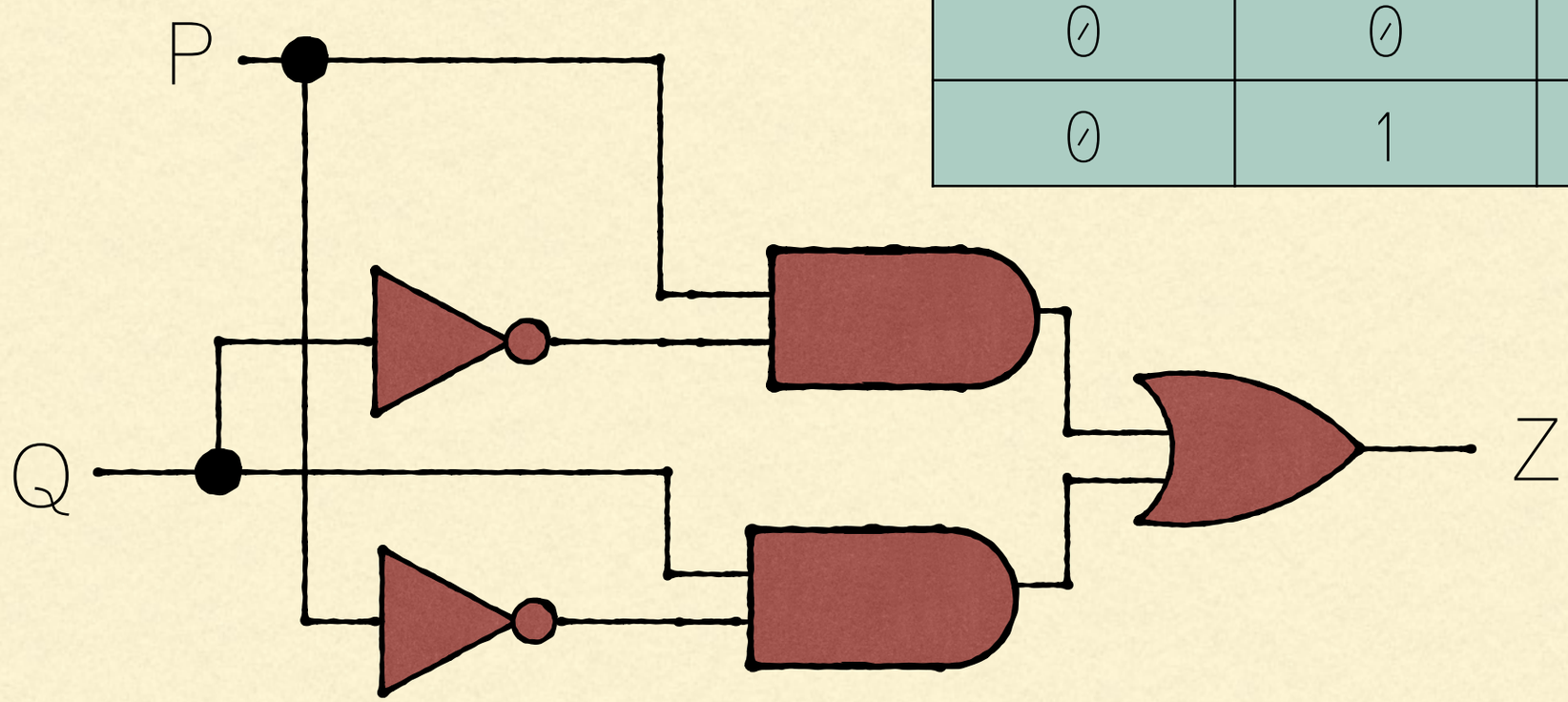

CONVERTING LOGIC GATES to BOOLEAN EXPRESSIONS

- We can convert from any boolean expression to logic gates and vice-versa

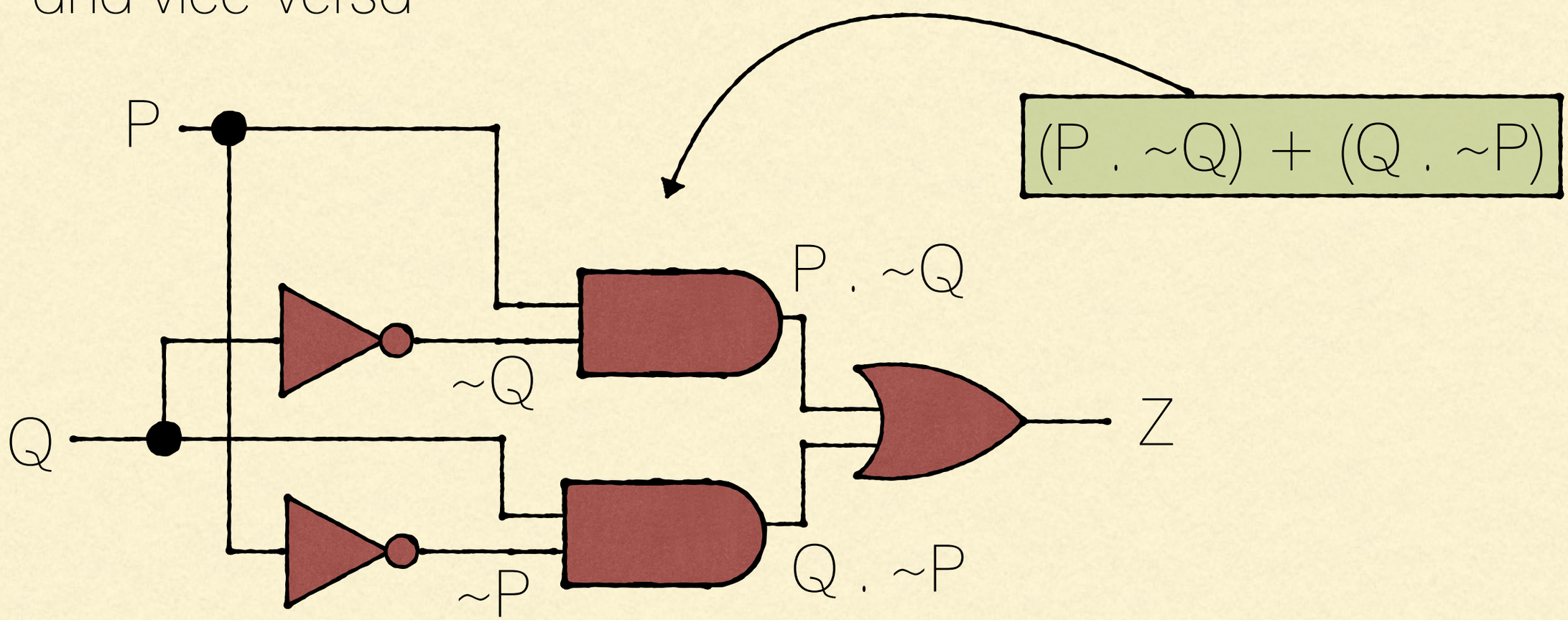

CONVERTING FROM A BOOLEAN EXPRESSION TO A TRUTH TABLE

(P . ~Q) + (Q . ~P) + R

P	Q	R	Expression
0	0	0	0
0	0	1	1
0	1	0	1
0	1	1	1
1	0	0	1
1	0	1	1
1	1	0	0
1	1	1	1

CONVERTING GATES TO BOOLEAN EXPRESSIONS

- Convert the following gates into a boolean expression:

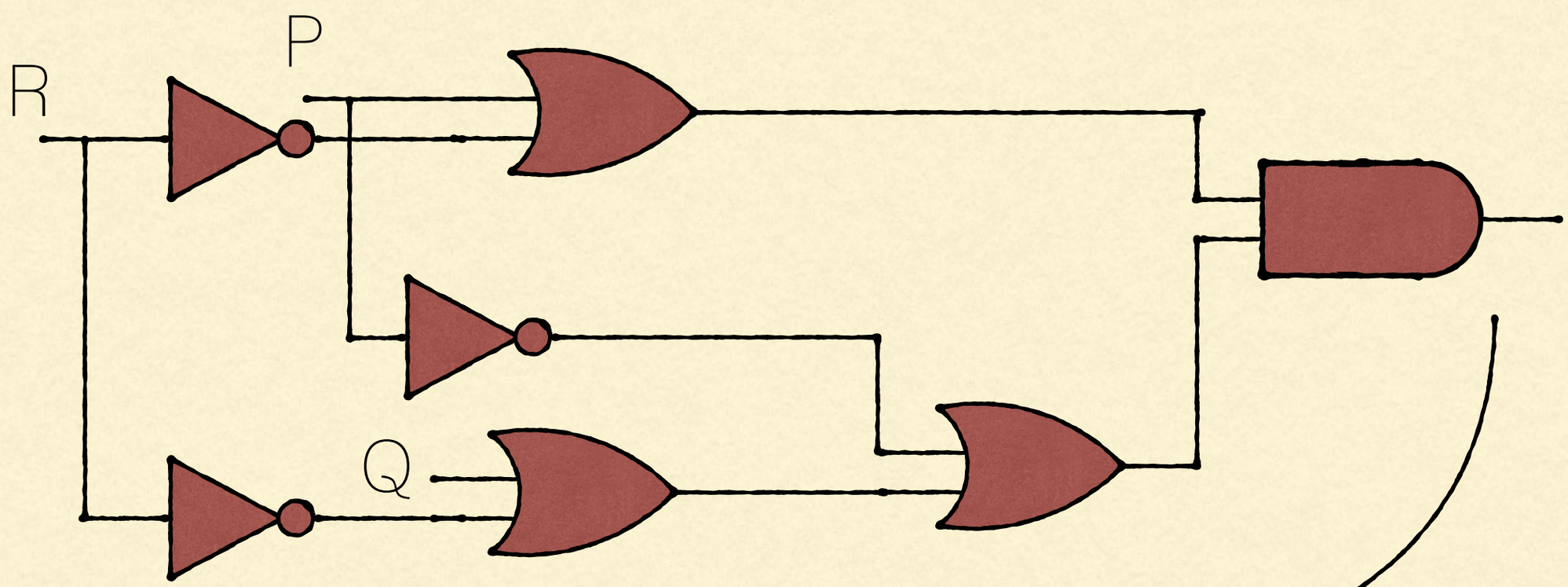

(P + ~R) . ((Q + ~R) + ~P)

CONVERTING FROM TRUTH TABLES TO BOOLEAN EXPRESSIONS

- Given a truth table, can we convert the truth table to a boolean expression?

P	Q	R	Expression
0	0	0	0
0	0	1	0
0	1	0	0
0	1	1	1
1	0	0	0
1	0	1	1
1	1	0	1
1	1	1	1

CONVERTING FROM TRUTH TABLES TO BOOLEAN EXPRESSIONS

- Given a truth table, can we convert the truth table to a boolean expression? Yes we can, using sum-of-products

P	Q	R	Expression	
0	0	0	0	
0	0	1	0	
0	1	0	0	
0	1	1	1	~P . Q . R
1	0	0	0	
1	0	1	1	P . ~Q . R
1	1	0	1	P . Q . ~R
1	1	1	1	P . Q . R

CONVERTING FROM TRUTH TABLES TO BOOLEAN EXPRESSIONS

P	Q	R	Expression
0	0	0	0
0	0	1	0
0	1	0	0
0	1	1	1
1	0	0	0
1	0	1	1
1	1	0	1
1	1	1	1

$$\sim P \,.\, Q \,.\, R + P \,.\, \sim Q \,.\, R + P \,.\, Q \,.\, \sim R + P \,.\, Q \,.\, R$$

HALF ADDER

- Let's try to build a circuit that adds two bits. This circuit is called the half adder.
  - We start by constructing the truth table for out input/output

HALF ADDER

- Let's try to build a circuit that adds two bits. This circuit is called the half adder.
  - We start by constructing the truth table for out input/output

A	B	Result	Carry
0	0	0	0
1	0	1	0
0	1	1	0
1	1	0	1

HALF ADDER

- Let's try to build a circuit that adds two bits. This circuit is called the half adder.
  - We start by constructing the truth table for out input/output

A	B	Result	Carry
0	0	0	0
1	0	1	0
0	1	1	0
1	1	0	1

What gate(s) does the carry represent?

HALF ADDER

- Let's try to build a circuit that adds two bits. This circuit is called the half adder.
  - We start by constructing the truth table for out input/output

A	B	Result	Carry
0	0	0	0
1	0	1	0
0	1	1	0
1	1	0	1

What gate(s) does the carry represent?

AND gate

HALF ADDER

- Let's try to build a circuit that adds two bits. This circuit is called the half adder.
  - We start by constructing the truth table for out input/output

A	B	Result	Carry
0	0	0	0
1	0	1	0
0	1	1	0
1	1	0	1

What gate(s) does the Result represent?

HALF ADDER

- Let's try to build a circuit that adds two bits. This circuit is called the half adder.
  - We start by constructing the truth table for out input/output

A	B	Result	Carry
0	0	0	0
1	0	1	0
0	1	1	0
1	1	0	1

What gate(s) does the Result represent?

EXCLUSIVE OR gate

BUILDING A HALF ADDER

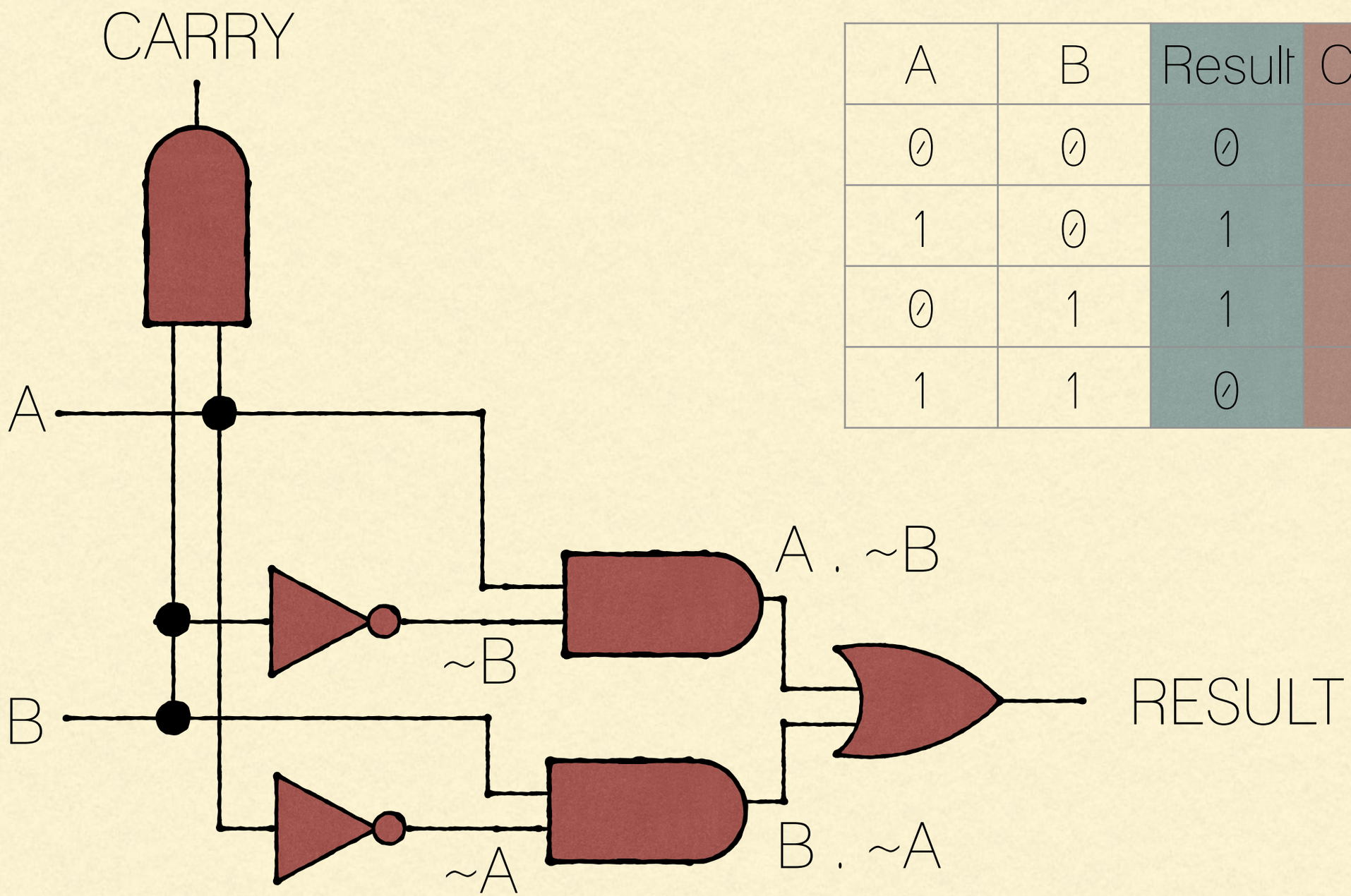

A	B	Result	Carry
0	0	0	0
1	0	1	0
0	1	1	0
1	1	0	1

HALF ADDER

Can we build 32 half adders to add a 32-bit sequence?

HALF ADDER

Can we build 32 half adders to add a 32-bit sequence?

- No. The problem with a half-adder is that there it doesn't handle carries. We need a circuit that can add three bits.
  - That circuit is called a full adder.

FULL ADDER

- Here are the characteristics of a full adder.
  - Data inputs; 3 (let's call them X, Y, and CARRY IN)
  - Outputs; 2 (let's call them SUM, and CARRY OUT)
- How many rows would our truth table for the full adder be?

FULL ADDER

- Here are the characteristics of a full adder.
  - Data inputs; 3 (let's call them X, Y, and CARRY IN)
  - Outputs; 2 (let's call them SUM, and CARRY OUT)
- How many rows would our truth table for the full adder be?

THE ANSWER IS 8 (2^3)

FULL ADDER

- Here are the characteristics of a full adder.
  - Data inputs; 3 (let's call them X, Y, and CARRY IN)
  - Outputs; 2 (let's call them SUM, and CARRY OUT)

X	Y	CARRY IN	SUM	CARRY OUT
0	0	0	0	0
1	0	0	1	0
0	1	0	1	0
1	1	0	0	1
0	0	1	1	0
1	0	1	0	1
0	1	1	0	1
1	1	1	1	1

FULL ADDER

- Sum of products for the ‘CARRY OUT’;

$$X.Y.\sim C_{IN} + X.\sim Y.C_{IN} + \sim X.Y.C_{IN} + X.Y.C_{IN}$$

X	Y	CARRY IN	SUM	CARRY OUT
0	0	0	0	0
1	0	0	1	0
0	1	0	1	0
1	1	0	0	1
0	0	1	1	0
1	0	1	0	1
0	1	1	0	1
1	1	1	1	1

FULL ADDER

- Sum of products for the 'CARRY OUT';

$$X.Y.\sim C_{IN} + X.\sim Y.C_{IN} + \sim X.Y.C_{IN} + X.Y.C_{IN}$$

Can be further simplified to; $X.Y + Y.C_{IN} + X.C_{IN}$

X	Y	CARRY IN	SUM	CARRY OUT
0	0	0	0	0
1	0	0	1	0
0	1	0	1	0
1	1	0	0	1
0	0	1	1	0
1	0	1	0	1
0	1	1	0	1
1	1	1	1	1

FULL ADDER

- Sum of products for the 'CARRY OUT';

$$X.Y.\sim C_{IN} + X.\sim Y.C_{IN} + \sim X.Y.C_{IN} + X.Y.C_{IN}$$

Can be further simplified to; $X.Y + Y.C_{IN} + X.C_{IN}$

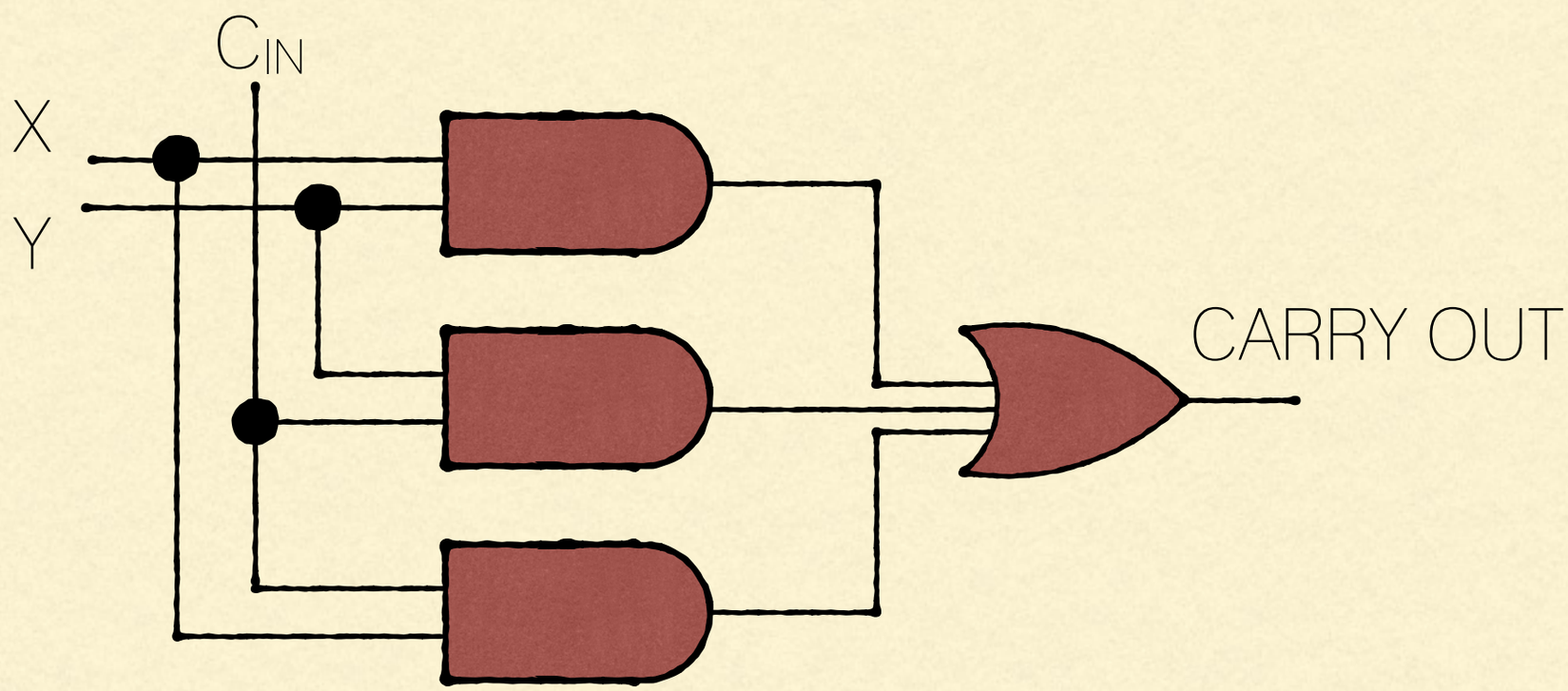

FULL ADDER

- Sum of products for the 'SUM';

$$X.\sim Y.\sim C_{IN} + \sim X.Y.\sim C_{IN} + \sim X.\sim Y.C_{IN} + X.Y.C_{IN}$$

X	Y	CARRY IN	SUM	CARRY OUT
0	0	0	0	0
1	0	0	1	0
0	1	0	1	0
1	1	0	0	1
0	0	1	1	0
1	0	1	0	1
0	1	1	0	1
1	1	1	1	1

FULL ADDER; CIRCUIT FIXED

- Sum of products for the 'SUM';

$$X.\sim Y.\sim C_{IN} + \sim X.Y.\sim C_{IN} + \sim X.\sim Y.C_{IN} + X.Y.C_{IN}$$

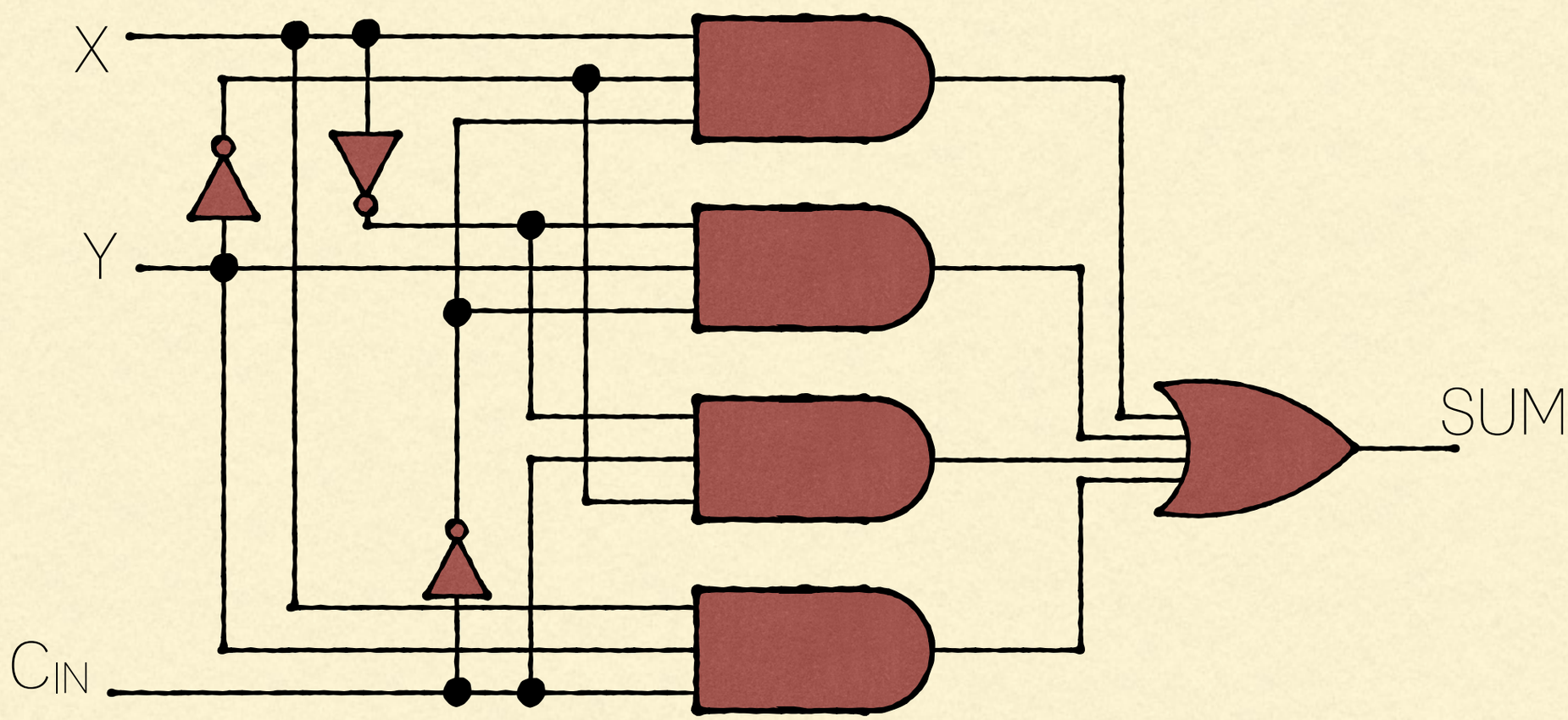

ADDING A 4-BIT SEQUENCE

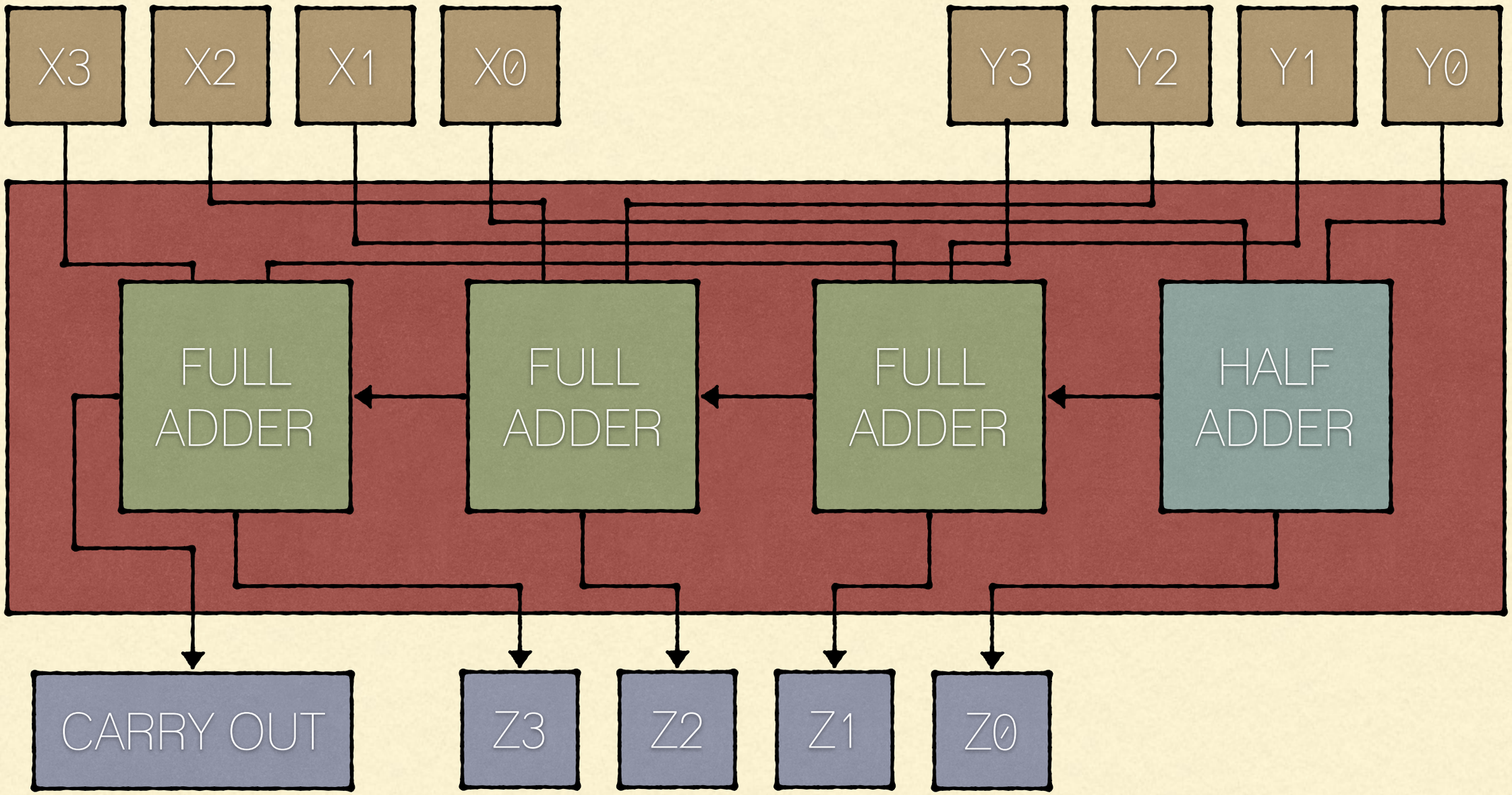

ADDING A 4-BIT SEQUENCE

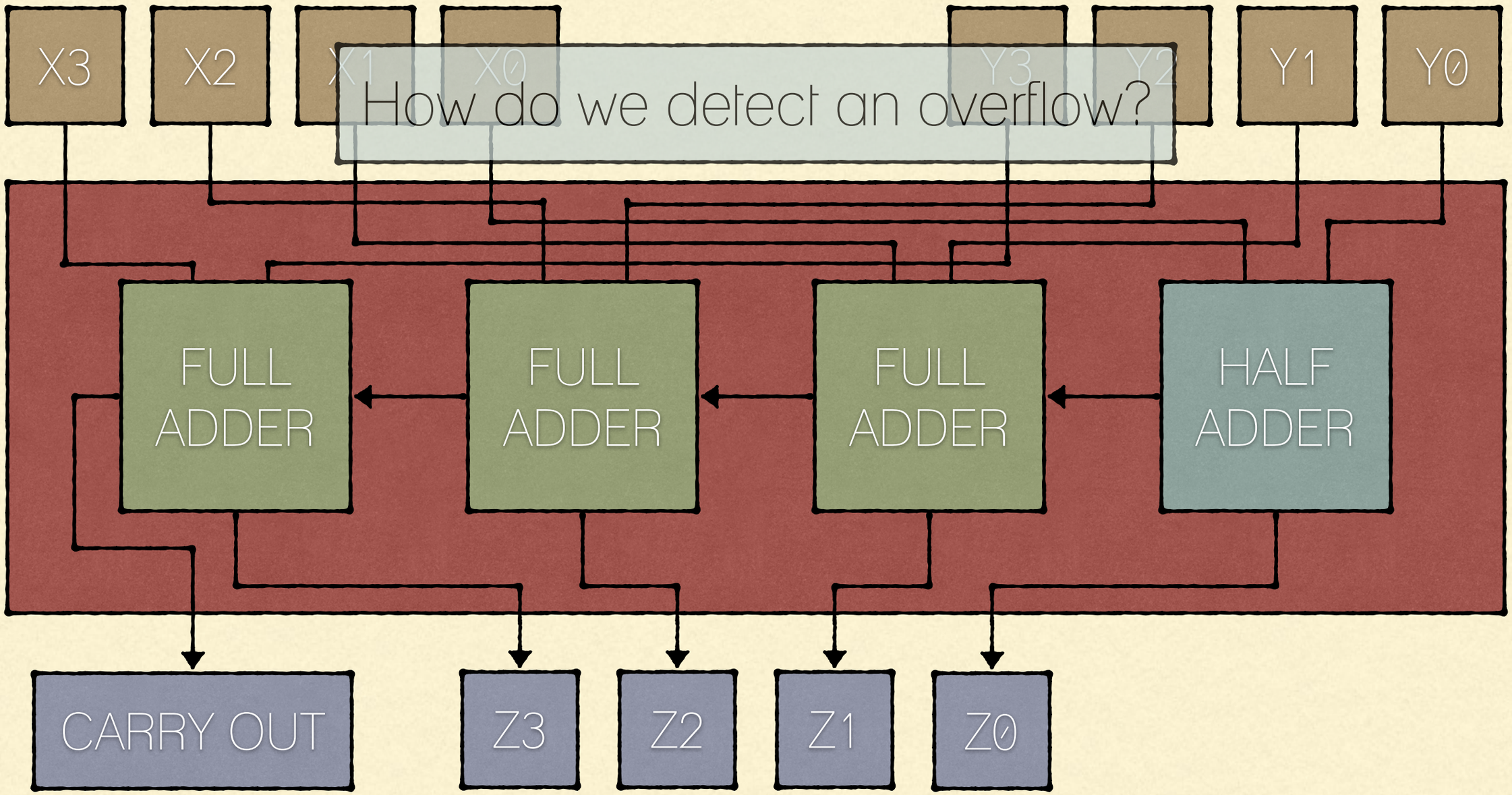

ADDING A 4-BIT SEQUENCE

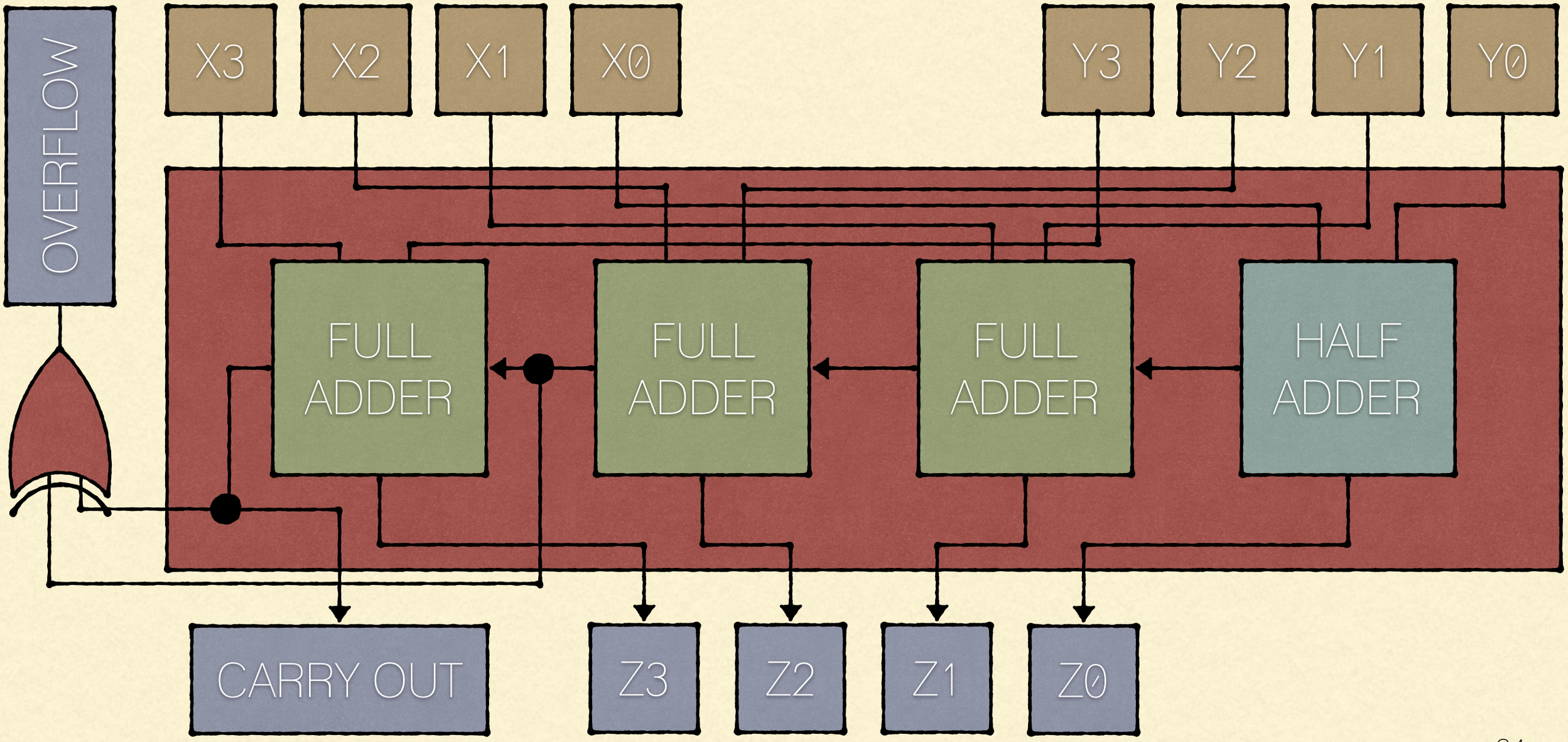

MULTIPLEXERS

- As we construct a CPU, one very useful combinational logic circuit is a multiplexer.
- A n-1 multiplexer, or MUX, for short, is a device that allows you to pick one of n inputs and direct it to an output.
- An n-1 MUX consists of the following:
  - Data inputs; n
  - Control inputs; ceil($\log_2$ n) — Number of bits needed to select any particular input
  - Outputs; 1
- For example, if you have 16 possible inputs, you need 4 bits to specify one of 16 values. If you have, say, 12 possible inputs, you still need 4 bits, even though some of the 4 bit patterns may not correspond to any of the 12 choices.

DIAGRAM OF 2-1 MUX

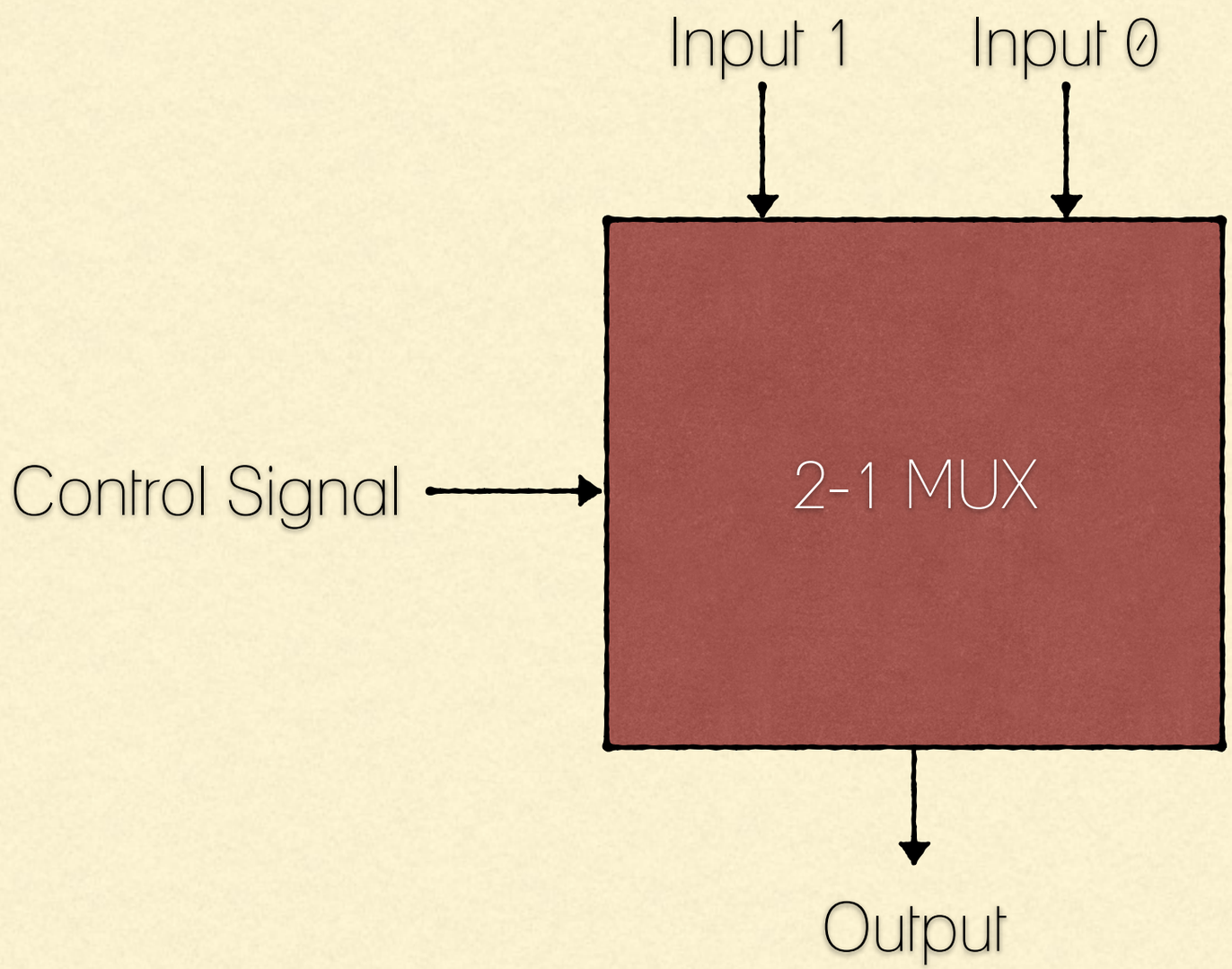

BEHAVIOR OF 2-1 MUX

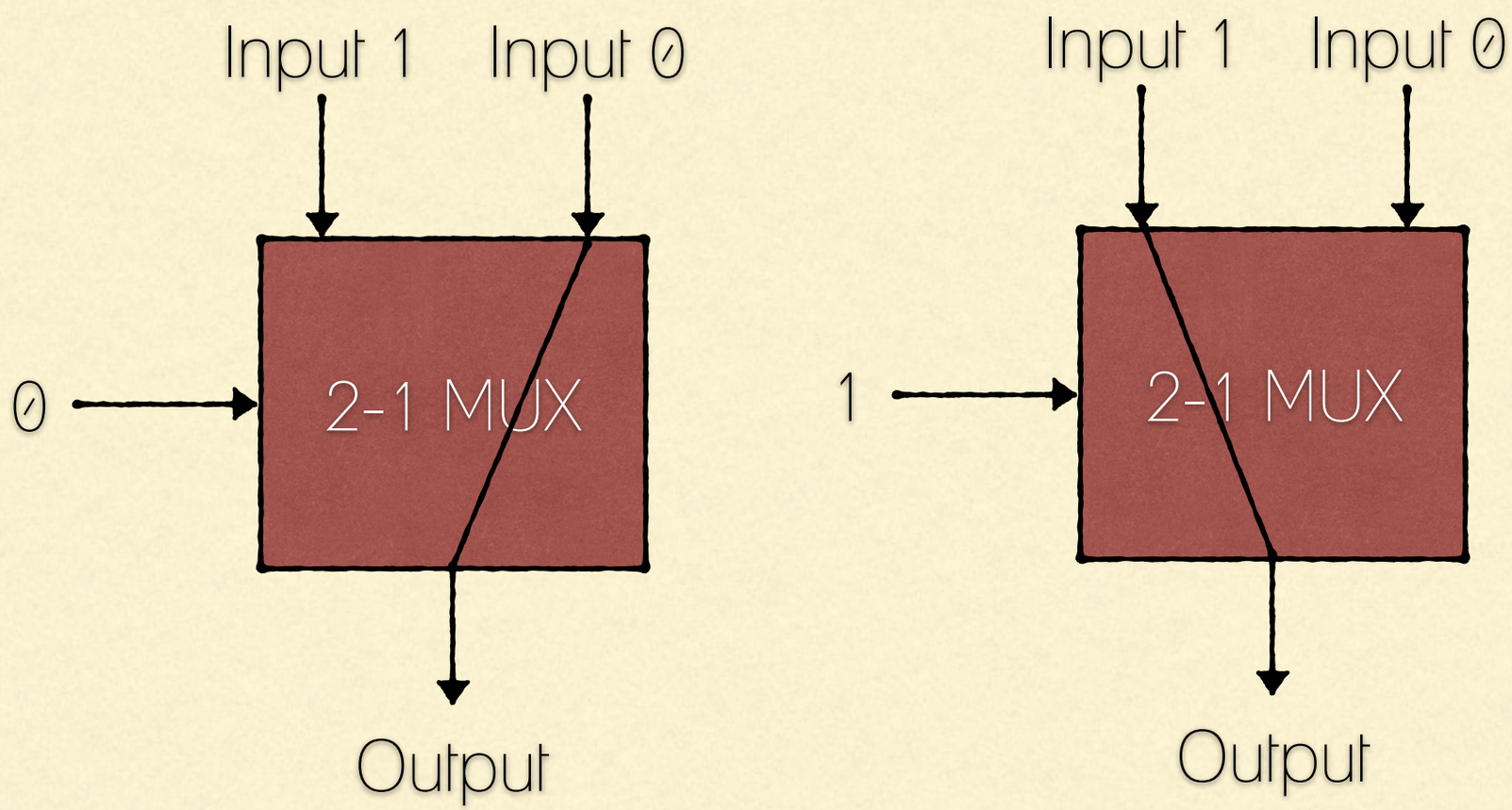

TRUTH TABLE OF 2-1 MUX

Before generating the boolean expressions for output, let's introduce “DON'T CARES”

INPUT 0	INPUT 1	CONTROL	OUTPUT
0	0	0	0
0	0	1	0
0	1	0	0
0	1	1	1
1	0	0	1
1	0	1	0
1	1	0	1
1	1	1	1

TRUTH TABLE OF 2-1 MUX

Input "DON'T CARE" arise when an output depends on only some of the inputs, and they are shown as Xs, in the input portion of the truth table

INPUT 0	INPUT 1	CONTROL	OUTPUT
0	0	0	0
0	0	1	0
0	1	0	0
0	1	1	1
1	0	0	1
1	0	1	0
1	1	0	1
1	1	1	1

When CONTROL = 0, we only care about INPUT 0. We DON'T CARE about INPUT 1

When CONTROL = 1, we only care about INPUT 1. We DON'T CARE about INPUT 0

TRUTH TABLE OF 2-1 MUX

Input "DON'T CARE" arise when an output depends on only some of the inputs, and they are shown as Xs, in the input portion of the truth table

INPUT 0	INPUT 1	CONTROL	OUTPUT
0	X	0	0
X	0	1	0
0	X	0	0
X	1	1	1
1	X	0	1
X	0	1	0
1	X	0	1
X	1	1	1

When CONTROL = 0, we only care about INPUT 0. We DON'T CARE about INPUT 1

When CONTROL = 1, we only care about INPUT 1. We DON'T CARE about INPUT 0

TRUTH TABLE TO GATES DIAGRAM; 2-1 MUX

Sum of products;
INPUT1.CONTROL + INPUT0.~CONTROL

INPUT 0	INPUT 1	CONTROL	OUTPUT
0	X	0	0
X	0	1	0
0	X	0	0
X	1	1	1
1	X	0	1
X	0	1	0
1	X	0	1
X	1	1	1

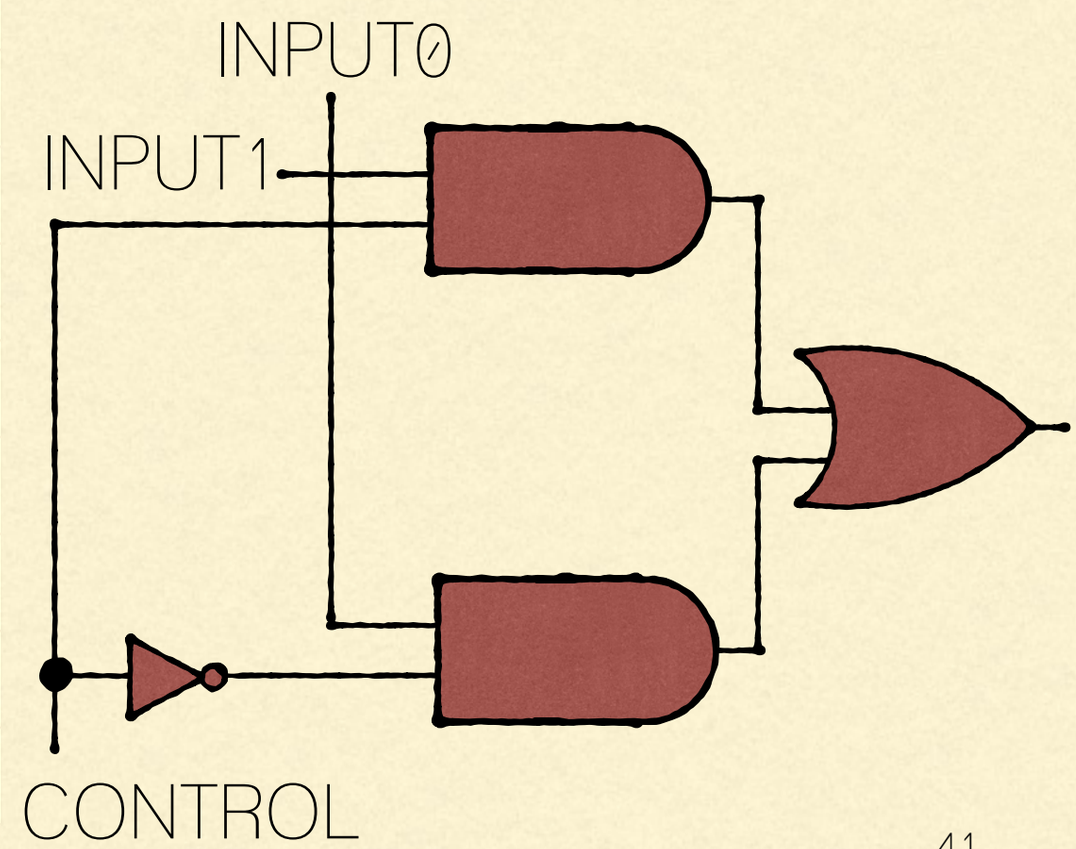

4-1 MUX

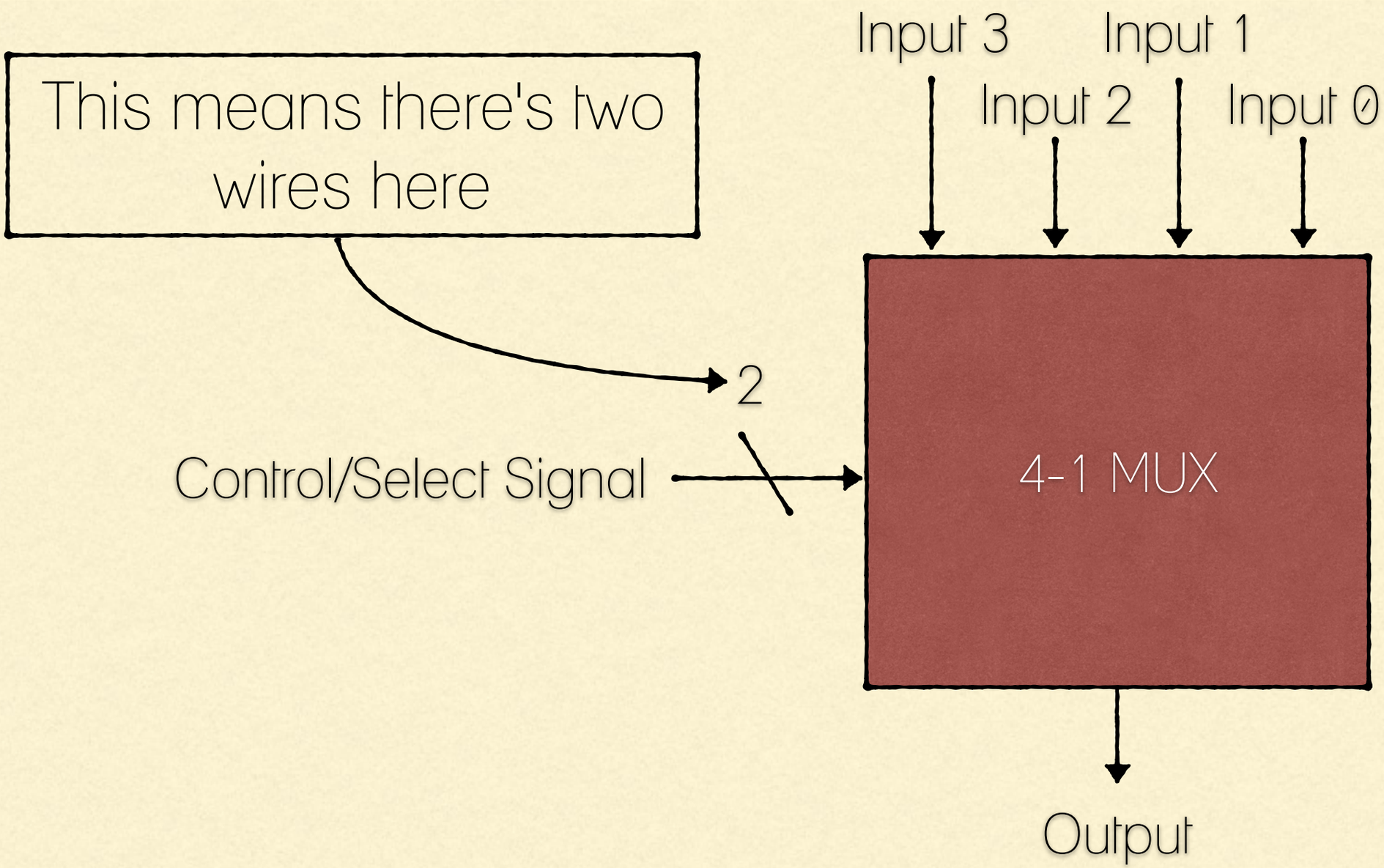
This means there's two wires here
2
Input 3
Input 2
Input 1
Input 0
Control/Select Signal
4-1 MUX
Output

4-1 MUX

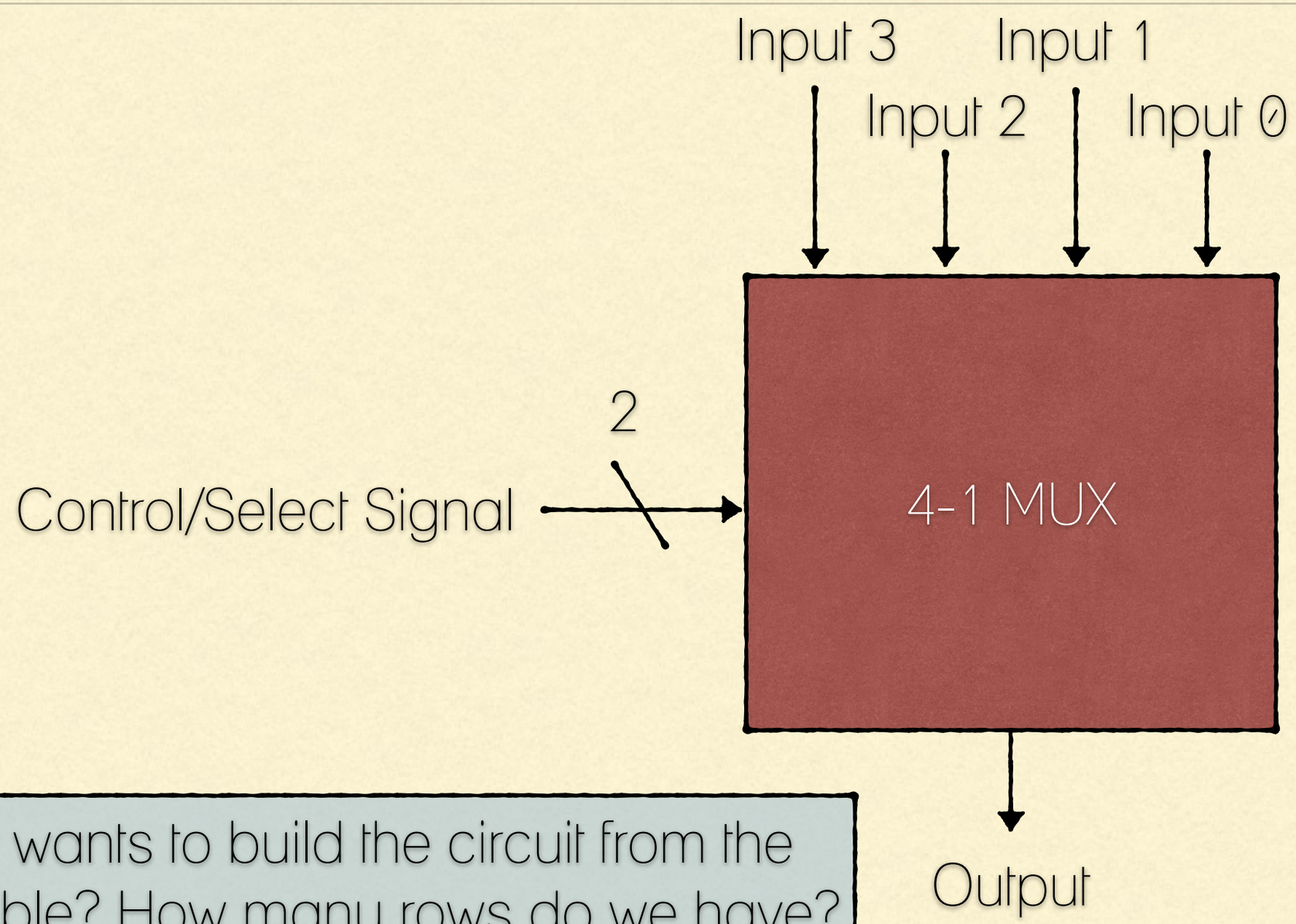

Who wants to build the circuit from the truth table? How many rows do we have?

4-1 MUX

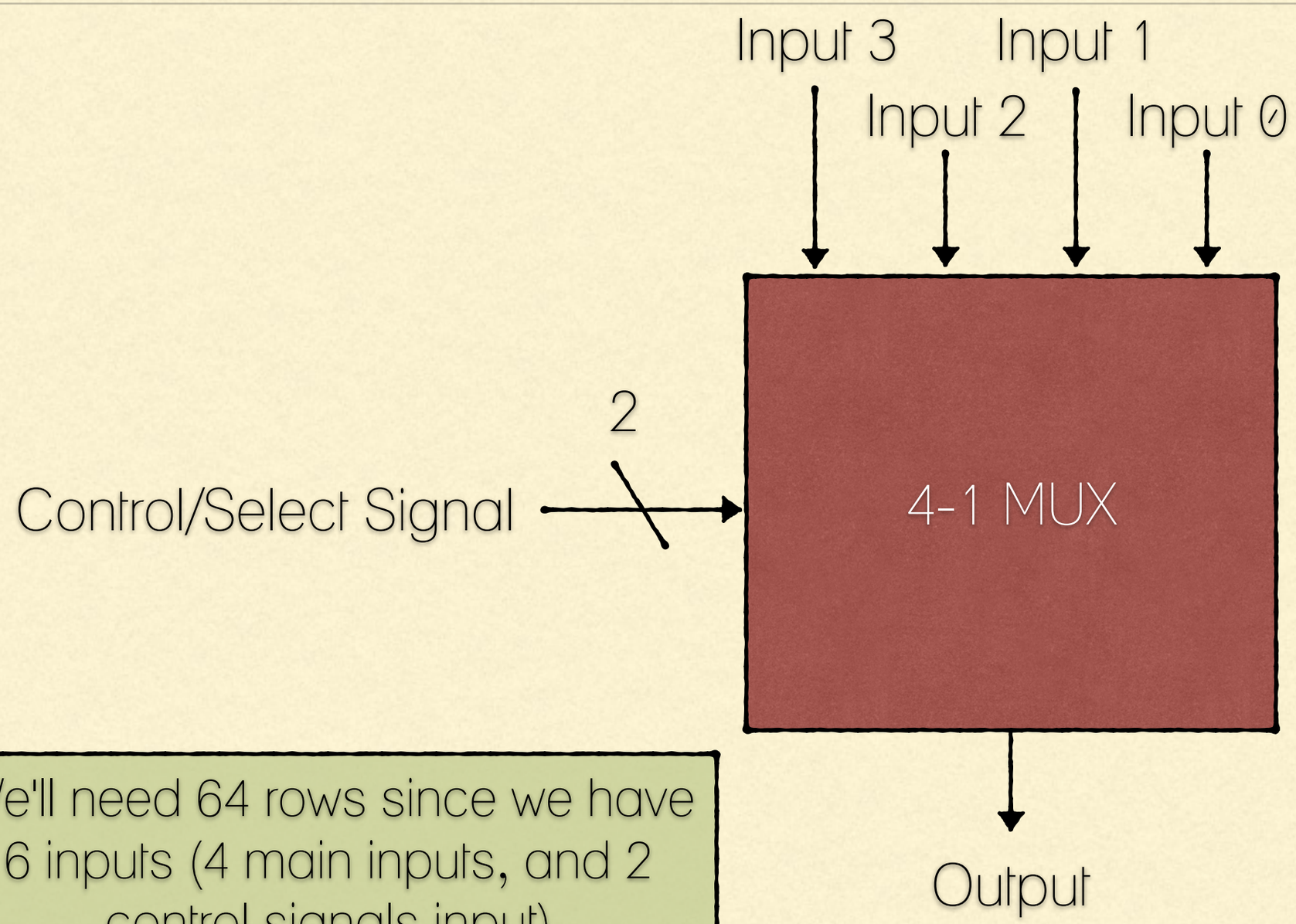

We'll need 64 rows since we have 6 inputs (4 main inputs, and 2 control signals input)

4-1 MUX

Instead, since we know how 'muxes' behave, we can list the few (only 4 in this case) possibilities/ rows that will make the output True

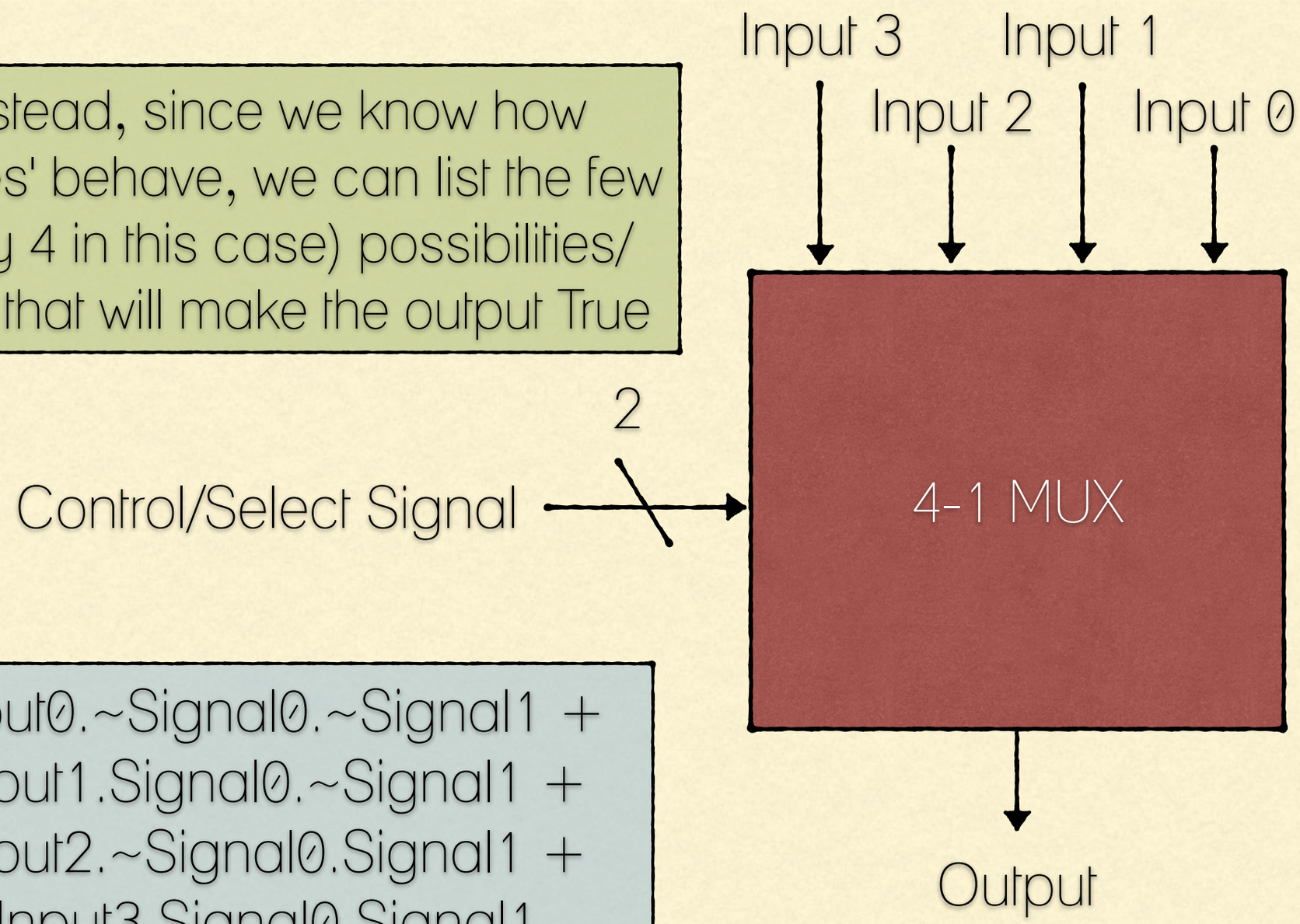

Input0.~Signal0.~Signal1 +
Input1.Signal0.~Signal1 +
Input2.~Signal0.Signal1 +
Input3.Signal0.Signal1
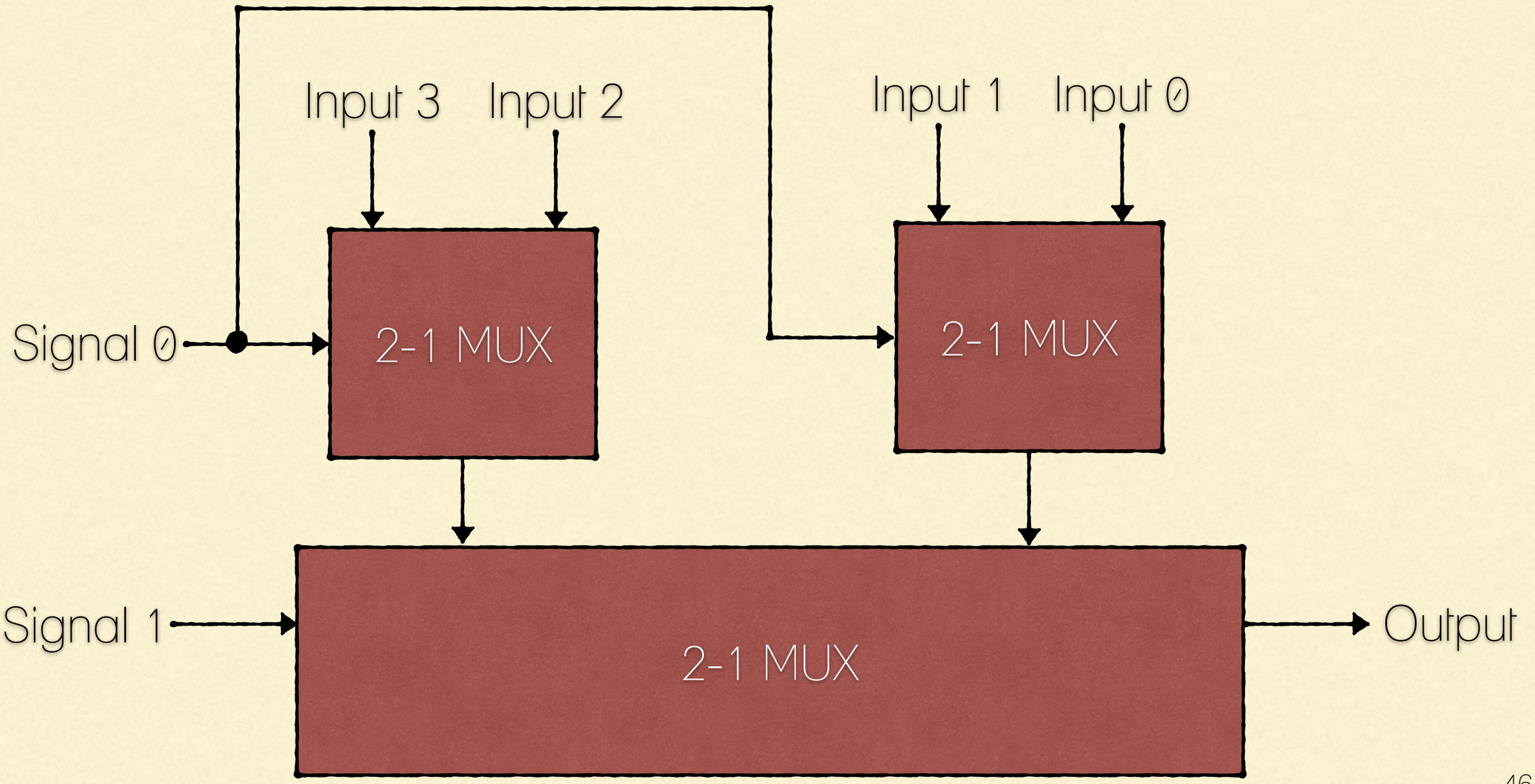
WE CAN ALSO USE THREE 2-1 MUXES TO CONSTRUCT A 4-1 MUX