AUTONOMOUS POOL ROBOT

AUSTIN LI

236.838.2903 | LinkedIn | Github | a564li@uwaterloo.ca

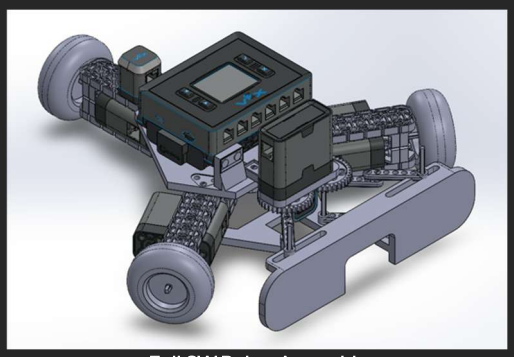

Full SW Robot Assembly

Final Version Assembled Robot

I created a Vex IQ powered robot which can detect a ball on a pool table, precisely positioning itself next to the ball, and strike it into the nearest pocket, all without user input.

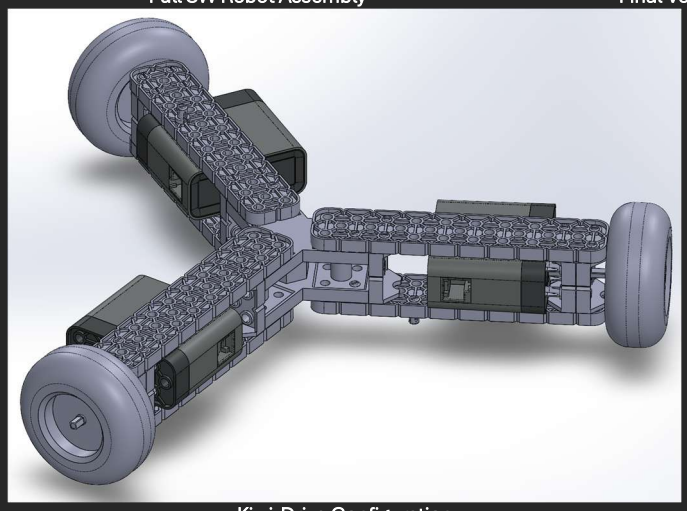

Kiwi-Drive Configuration

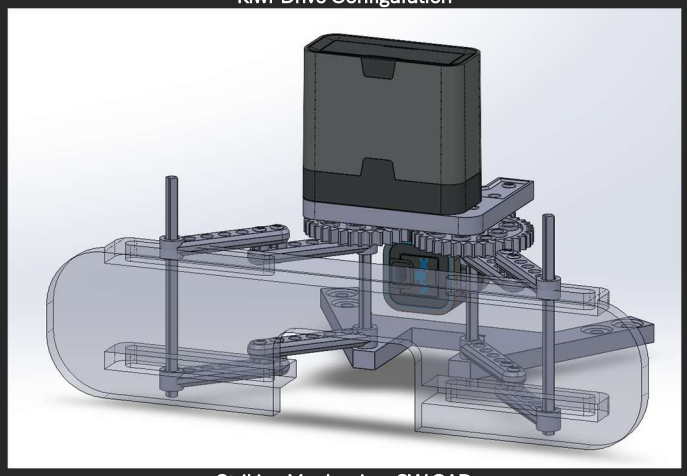

Striking Mechanism SW CAD

Goals

1. Consistently detect a pool ball using a linear laser sensor.
2. Enable omni-directional movement while staying within material constraints.
3. Accurately keep track of position as the robot traverses the table.
4. Strike the pool ball precisely such that it travels in a straight line into a pocket.

Drive Configuration Selection

- Kiwi-drive, with wheels spaced 120° apart, was chosen due to the constraint of only four motors in total.
- Kiwi-drive enables full omni-directional movement at the cost of more complex inverse-kinematics; however, it is still preferred due to its increased maneuverability.
- I created custom 3D-printed brackets to precisely and rigidly fix the wheels at the correct angles.

Striking Mechanism

- The striking mechanism uses bar linkages which constrain the orientation of the striking bumper to be always parallel with the front face, this guarantees that the ball will be hit straight forwards.

Striking Mechanism Extended

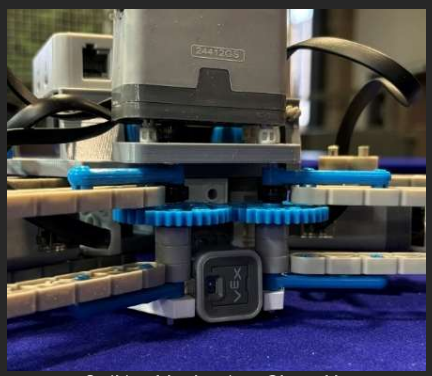

Striking Mechanism Close-Up

- A pass-through hole was designed such that the distance sensor could still detect objects directly ahead.
- The mechanism uses as many first party Vex components as possible to reduce the number of custom parts to be printed.

AUTONOMOUS POOL ROBOT

AUSTIN LI

236.838.2903 | LinkedIn | Github | a564li@uwaterloo.ca

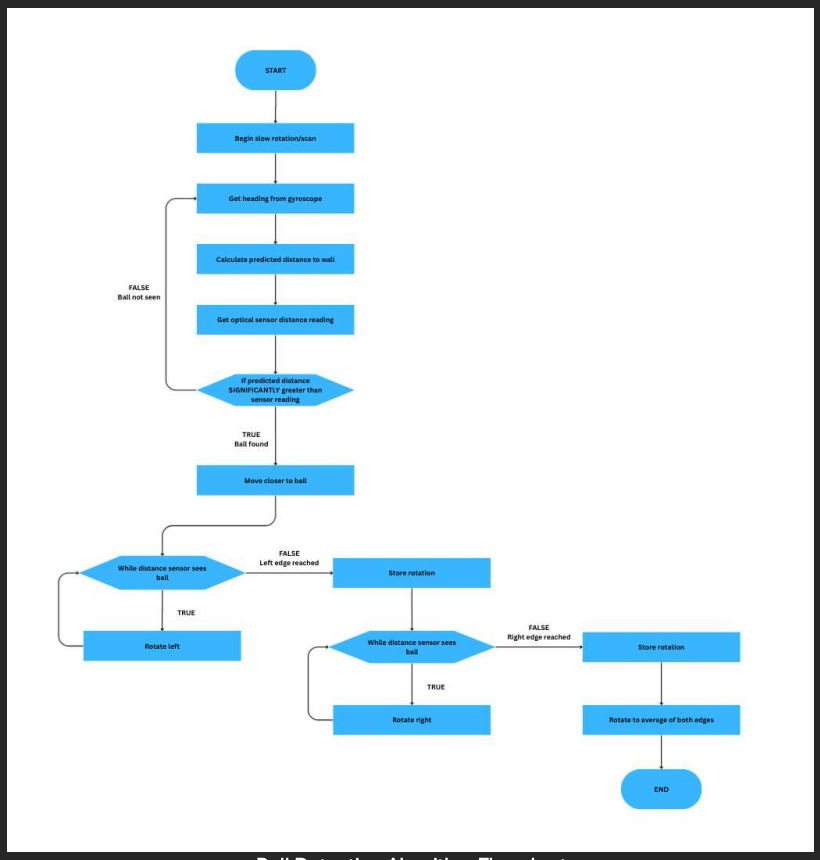

Ball Detection Algorithm Flowchart

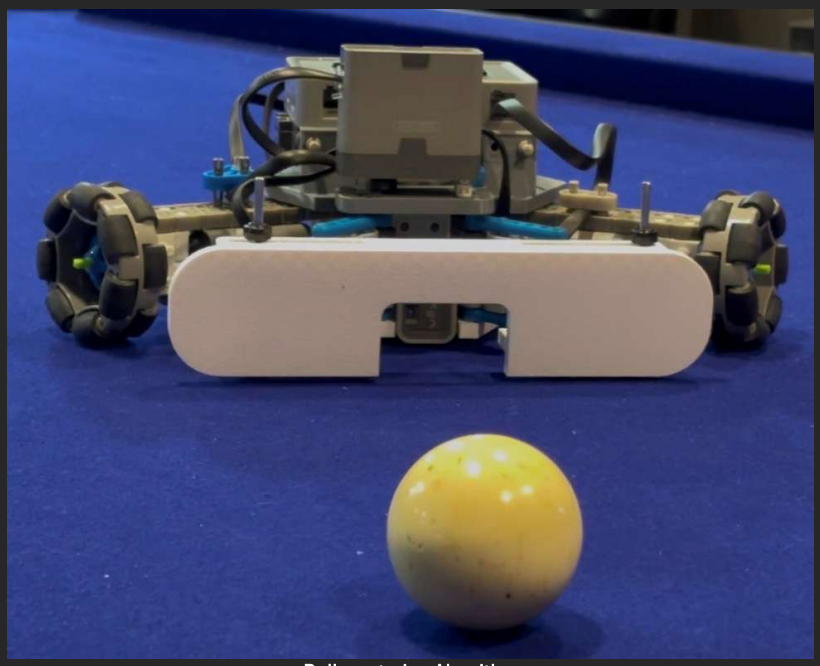

Ball-centering Algorithm

Ball Detection

- I created an algorithm in C++ which could detect a ball by scanning the tabletop to look for discrepancies in the theoretical wall distance.
- I used the on-board gyroscope to get the heading of the robot and used this in conjunction with the position to calculate the distance to the wall using trigonometry, by comparing this theoretical distance to the value seen by the distance sensor I could predict when a ball is seen.
- To improve consistency, I incorporated data-smoothing by averaging a sample of past values, and data-filtering by rejecting solitary outliers.
- To accurately point at the centre of the ball, I developed an algorithm which detects the outer edges of the ball then averages to find the centre.

Results

- The robot achieved an overall 70% success rate of sinking the pool ball.
- The ball detection algorithm worked nearly flawlessly, achieving a 90% success rate of detecting and traversing properly to the pool ball; I am especially proud of this as the hardware limitations turned this into the most challenging task of the project.
- The striking mechanism behaved nominally, striking the pool ball in a straight line as intended every time.