PIN	Default Config	SPI boot mode	Joint download boot
IO2	Floating	High	High
IO8	Floating	Any value	High
IO9	High	High	Low

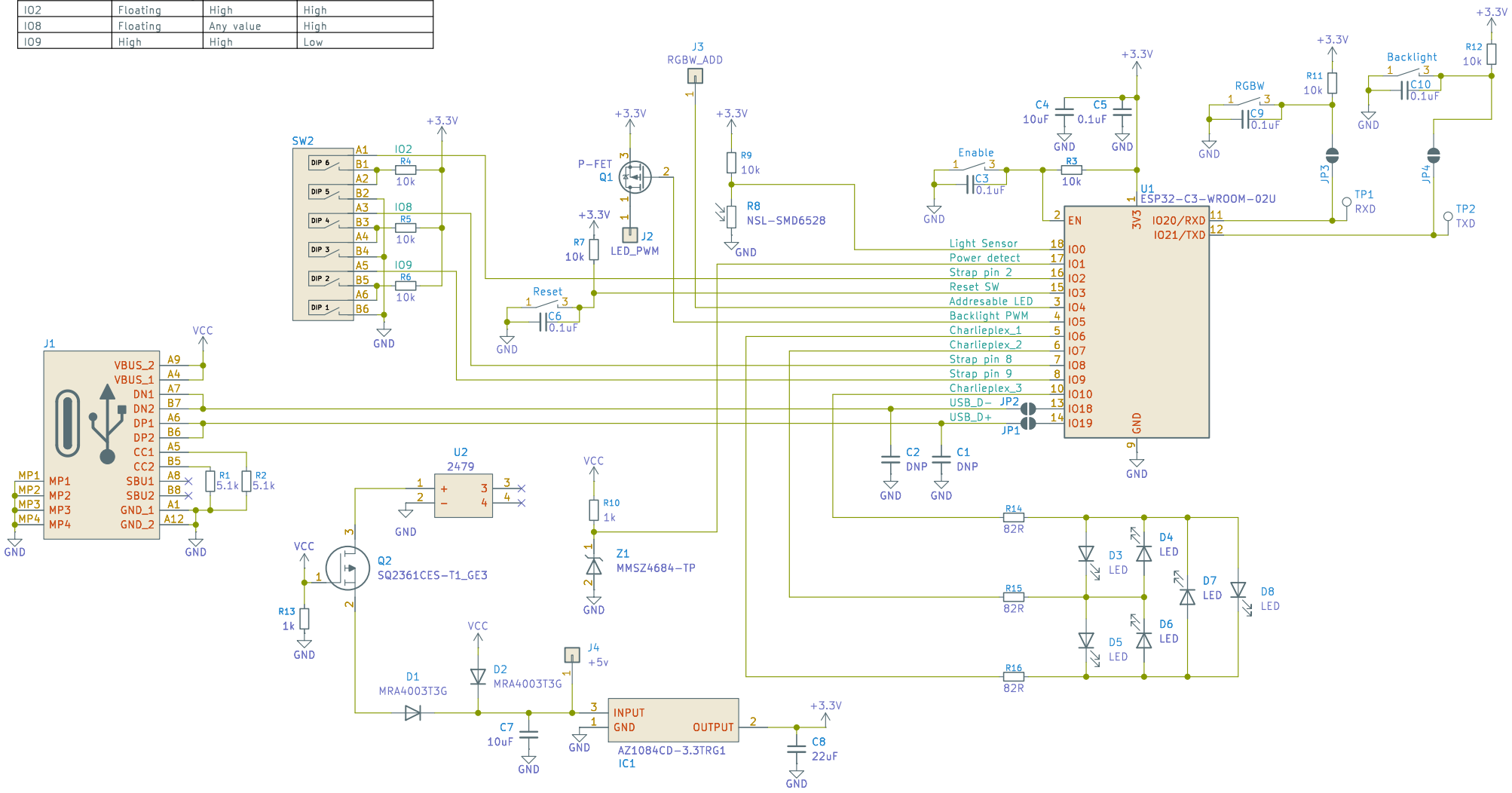

Leds

File: LED.kicad_sch

Austris Pumpurs

Sheet: /
File: PictrureFrame.kicad_sch

Title: Controller board

Size: A4	Date: 2026-03-03	Rev: 1.0
KiCad E.D.A. 9.0.5		Id: 1/2

Austris Pumpurs

Sheet: /Leds/

File: LED.kicad_sch

Title: LED Board

Size: A3	Date: 2026-03-03	Rev: 1.0
KiCad E.D.A. 9.0.5		Id: 2/2