TALON-1

Modular Flight Computer System

Technical Documentation — Revision 1.0

Kestrel Avionics

March 23, 2026

This document contains proprietary technical information belonging to Kestrel Avionics.

Contents

1 Introduction **3**
1.1 Document Purpose and Scope . . . 3
1.2 System Overview . . . 3
1.3 Intended Use . . . 3

2 TALON-1 System Architecture **4**
2.1 Design Philosophy . . . 4
2.2 Modular Stack Rationale . . . 4
2.3 Inter-Board Communication (Pin Headers) . . . 4
2.4 Signal Definitions and Bus Pinout . . . 5
2.5 Power Architecture . . . 5

3 Component Index **6**
3.1 Sensors and Measurement Devices . . . 6
3.2 Communication and RF Devices . . . 6
3.3 Power Components . . . 6
3.4 Passive Components . . . 6

4 TALON-1A: Core Processing Module **8**
4.1 Overview and Purpose . . . 8
4.2 Microcontroller Selection . . . 8
4.3 Power Regulation Design . . . 8
4.4 Motor Driver Interface and Airbrake Control . . . 8
4.5 PCB Layer Stack-up . . . 9
4.6 Schematic . . . 9
4.7 PCB Layout . . . 10
4.8 3D View . . . 11

5 TALON-1B: Sensing Module **12**
5.1 Overview and Purpose . . . 12
5.2 Inertial Measurement — LSM6DSVTR . . . 12
5.3 Barometric Altimetry — LPS27HHWTR . . . 12
5.4 Magnetometry — IIS2MDCTR . . . 12
5.5 I2C Bus Design and Addressing . . . 12
5.6 Schematic . . . 13
5.7 PCB Layout . . . 14
5.8 3D View . . . 15

6 TALON-1C: RF and Navigation Module **16**
6.1 Overview and Purpose . . . 16
6.2 GNSS Receiver — MAX-M10M . . . 16
6.3 Long Range Telemetry — RA-01H . . . 16
6.4 Antenna Considerations . . . 16
6.5 Schematic . . . 16
6.6 PCB Layout . . . 17
6.7 3D View . . . 18

7 Firmware Architecture **19**
7.1 Software Overview . . . 19
7.2 Project Structure . . . 19
7.3 Telemetry Packet Protocol . . . 20
7.4 Flight State Machine . . . 20
7.5 Sensor Acquisition . . . 21
7.6 Sensor Fusion — Extended Kalman Filter . . . 21
7.7 Ground Station Interface . . . 21

Chapter 1: Introduction

1.1 Document Purpose and Scope

This document provides the full technical reference for the TALON-1 modular flight computer system, developed by Kestrel Avionics. It covers system architecture, component selection rationale, PCB design, and firmware overview.

1.2 System Overview

The TALON-1 is a three-board modular avionics stack designed for high-powered rocketry applications. The system is built around a circular PCB form factor with inter-board communication via 2.54mm pitch pin headers. The three modules are designated TALON-1A (Core Processing), TALON-1B (Sensing), and TALON-1C (RF and GPS), stacked bottom to top respectively.

1.3 Intended Use

The TALON-1 system is designed for use in high-powered rocketry applications across all certification levels under Tripoli Rocketry Association and National Association of Rocketry guidelines. The modular architecture allows the system to be configured and adapted for a wide range of rocket airframes and mission profiles.

Chapter 2: TALON-1 System Architecture

2.1 Design Philosophy

The TALON-1 was designed with an emphasis on modularity, repairability, and iterative development. Rather than consolidating all avionics functions onto a single PCB, the system separates concerns into three discrete modules, each responsible for a distinct functional domain. This philosophy reduces the cost and complexity of revision cycles, as a change to the RF subsystem does not require a redesign of the processing or sensing layers.

2.2 Modular Stack Rationale

The decision to implement the TALON-1 as a three-board modular stack was driven by several engineering considerations. Separating processing, sensing, and RF functions into discrete modules allows each board to be developed, tested, and replaced independently. This reduces risk during development and simplifies debugging, as each module can be validated in isolation before system integration. Additionally, the modular approach allows future revisions of a single module — for example upgrading the RF module to support a different radio — without requiring a full system redesign.

2.3 Inter-Board Communication (Pin Headers)

Inter-board communication is achieved via 2.54mm pitch pin headers. Each board exposes a male header for signal output and accepts a female header for signal input, allowing boards to be firmly mated and separated without tools. The bus carries a total of ten signals as defined in Section 2.4.

2.4 Signal Definitions and Bus Pinout

Signal	Type	Destination
3V3	Power	All boards
GND	Power	All boards
SDA	I2C Data	TALON-1B sensors, TALON-1C GPS
SCL	I2C Clock	TALON-1B sensors, TALON-1C GPS
MOSI	SPI Data	TALON-1C RA-01H
MISO	SPI Data	TALON-1C RA-01H
SCK	SPI Clock	TALON-1C RA-01H
CS	SPI Chip Select	TALON-1C RA-01H
DIO1	Digital Input	TALON-1C RA-01H interrupt
RESET	Digital Output	TALON-1C RA-01H reset

Table 2.1: TALON-1 Bus Signal Definitions

2.5 Power Architecture

The TALON-1 electronics stack and airbrake motor are powered by a single 3S LiPo battery (11.1V nominal, 12.6V fully charged) mounted in the rocket airframe. The raw battery voltage is regulated to 3.3V on the TALON-1A module for all digital logic and sensors via an onboard buck converter. The raw battery voltage is also fed directly to the motor driver, which controls the 12V DC airbrake motor without additional regulation.

Chapter 3: Component Index

3.1 Sensors and Measurement Devices

Part Number	Description	Interface	Module
LSM6DSVTR	6-axis IMU (Accel + Gyro)	I2C	TALON-1B
LPS27HHWTR	Barometric Pressure Sensor	I2C	TALON-1B
IIS2MDCTR	3-axis Magnetometer	I2C	TALON-1B
MAX-M10M	GNSS Receiver	I2C	TALON-1C

Table 3.1: Sensing Components

3.2 Communication and RF Devices

Part Number	Description	Interface	Module
RA-01H	915MHz LoRa Transceiver	SPI	TALON-1C

Table 3.2: RF and Communication Components

3.3 Power Components

Part Number	Description	Module
AP63203WU-7	3.3V 2A Buck Converter	TALON-1A
TB6612FNG	Dual H-Bridge Motor Driver	TALON-1A

Table 3.3: Power Components

3.4 Passive Components

All passive components are 0402 imperial package unless otherwise noted.

Value	Description	Notes
100nF	Decoupling capacitor	Place at each IC VDD pin
10μF	Bulk capacitor	Near buck converter output
100μF 25V	Electrolytic capacitor	Motor rail bulk decoupling
4.7kΩ	I2C pull-up resistor	SDA and SCL lines
10kΩ	General pull-up/down	CS, RESET, STBY lines

Table 3.4: Passive Components

Chapter 4: TALON-1A: Core Processing Module

4.1 Overview and Purpose

The TALON-1A is the bottom board of the TALON-1 stack and serves as the central processing and power management module. It hosts the microcontroller, the 3.3V power regulation circuitry, and the motor driver. All inter-board communication originates from this board via male 2.54mm pitch pin headers which mate with the female headers on the TALON-1B board above.

4.2 Microcontroller Selection

The STM32H503KBU6 was selected as the primary microcontroller for the TALON-1A. Operating at up to 250MHz with an ARM Cortex-M33 core, it provides substantial processing headroom for sensor fusion, telemetry formatting, and flight state management simultaneously. The device offers multiple I2C and SPI peripherals, 128KB of flash memory, and 32KB of SRAM. The UFQFPN-32 package was chosen for its compact footprint, well suited to the circular PCB form factor of the TALON-1 stack.

4.3 Power Regulation Design

The TALON-1 electronics stack is powered by a single 3S LiPo battery (11.1V nominal, 12.6V fully charged). The AP63203WU-7 synchronous buck converter steps this input voltage down to a regulated 3.3V rail supplying the MCU and all sensors across the stack. The device supports up to 2A continuous output current. A 10μF input capacitor and 22μF output capacitor are placed close to the converter as specified in the datasheet. The raw battery voltage is passed directly to the TB6612FNG motor driver for airbrake motor control and is not regulated further.

4.4 Motor Driver Interface and Airbrake Control

The TB6612FNG dual H-bridge motor driver controls the airbrake mechanism, which is actuated by a 12V DC geared motor rated at 0.68A continuous and 2.19A stall current. The motor supply is connected directly to the 3S LiPo battery rail. The STBY pin is pulled high to 3.3V to keep the device active. Motor direction and speed are controlled via PWM signals from the STM32H503KBU6, allowing precise positioning of the airbrake surfaces during ascent. The H-bridge configuration allows the motor to be driven in both directions, enabling both deployment and retraction of the airbrake.

4.5 PCB Layer Stack-up

The TALON-1A is a four-layer PCB. The layer stack-up is defined in Table 4.1. Separating power and ground onto dedicated internal planes provides a low-impedance power distribution network and a continuous ground reference beneath all signal traces, which is particularly important for the high-frequency SPI and I2C signals routed to the upper boards.

Layer	Name	Function
1 (Top)	Front	Signal routing, component placement
2	GND	Continuous ground plane
3	3V3	Regulated 3.3V power plane
4 (Bottom)	Back	Signal routing

Table 4.1: TALON-1A PCB Layer Stack-up

4.6 Schematic

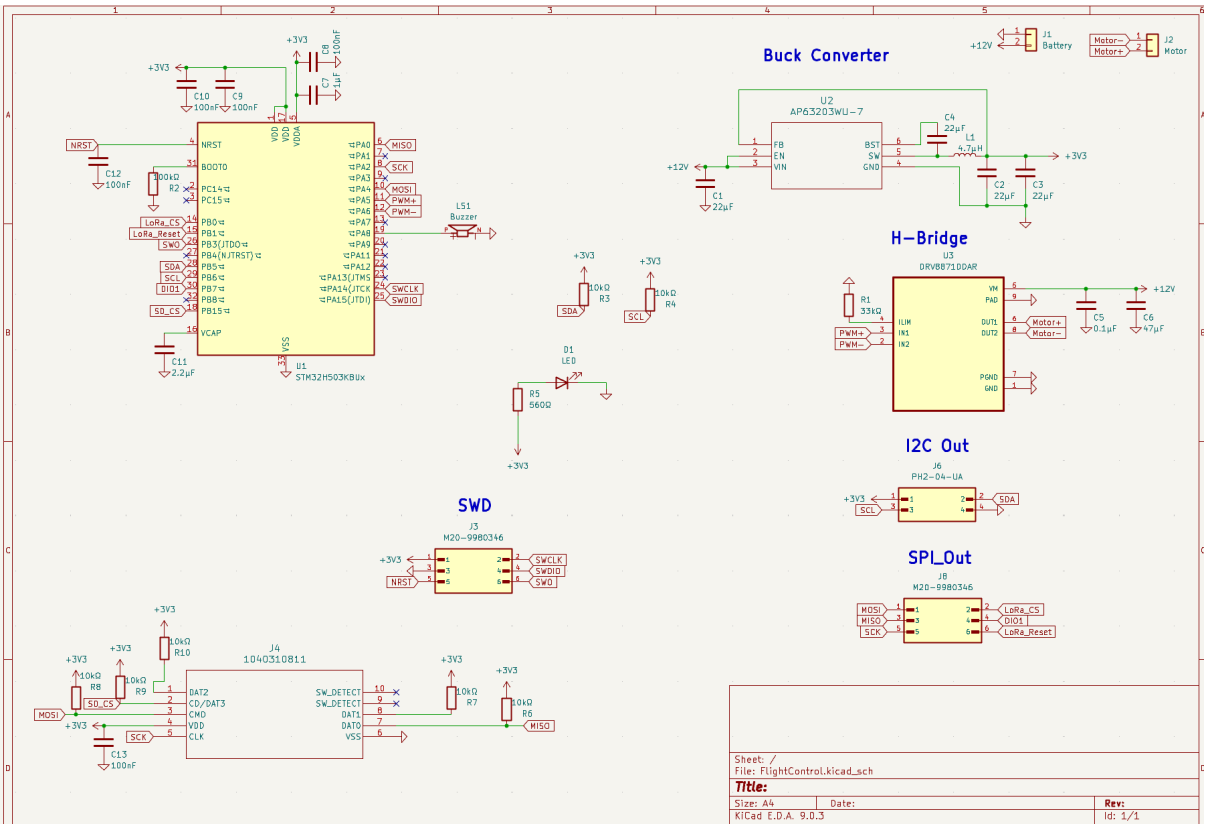

Figure 4.1: TALON-1A Core Processing Module schematic showing the STM32H503KBU6 microcontroller, AP63203WU-7 buck converter, TB6612FNG motor driver, and all supporting passives.

4.7 PCB Layout

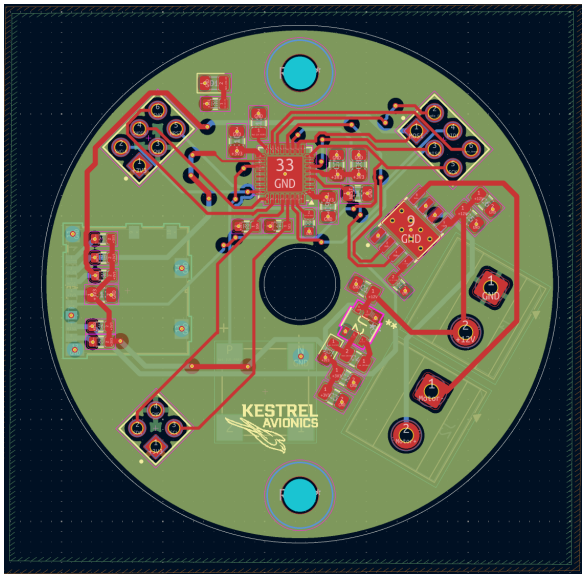

(a) Front copper layer (F.Cu) — signal routing and component placement. The STM32H503KBU6, buck converter, and motor driver are mounted on this side.

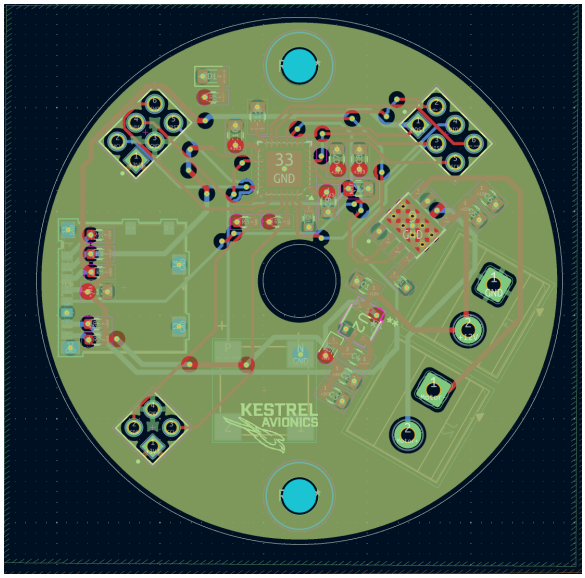

(b) Layer 2 — continuous GND plane providing a low impedance ground reference beneath all signal traces and components.

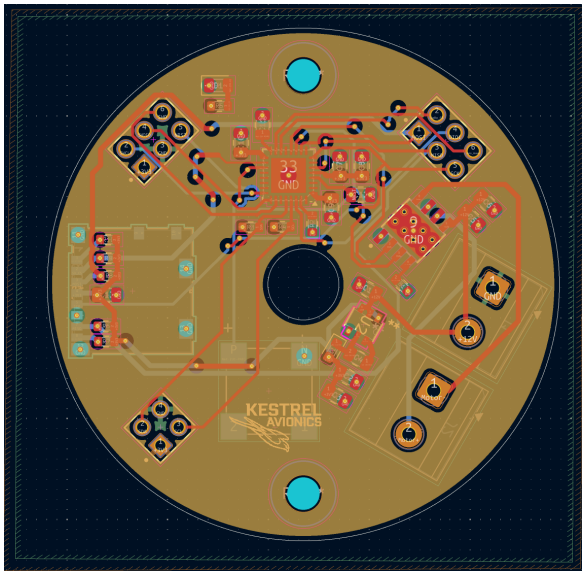

(c) Layer 3 — 3.3V power plane distributing regulated voltage to the microcontroller and all sensors across the stack.

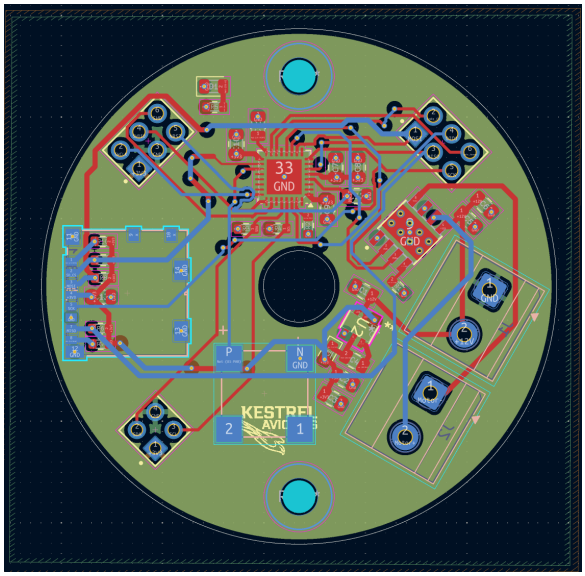

(d) Back copper layer (B.Cu) — secondary signal routing layer.

Figure 4.2: TALON-1A Core Processing Module PCB layout showing all four copper layers.

4.8 3D View

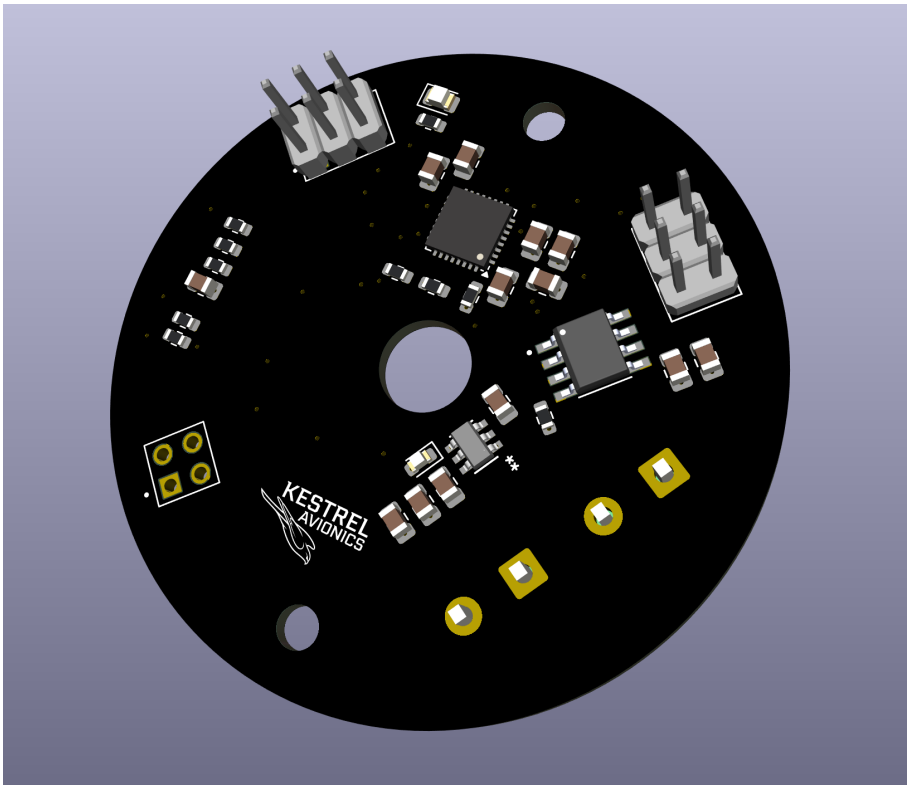

Figure 4.3: TALON-1A Core Processing Module 3D render showing the assembled board with the STM32H503KBU6 microcontroller, AP63203WU-7 buck converter, TB6612FNG motor driver, and male 2.54mm pin headers for inter-board connection.

Chapter 5: TALON-1B: Sensing Module

5.1 Overview and Purpose

The TALON-1B is the middle board of the TALON-1 stack and is dedicated entirely to environmental and inertial sensing. It carries three ST MEMS sensors communicating over a shared I2C bus. The board receives signals from the TALON-1A below via female 2.54mm pitch pin headers and passes all signals through to the TALON-1C above via male 2.54mm pitch pin headers.

5.2 Inertial Measurement — LSM6DSVTR

The LSM6DSVTR is a 6-axis inertial measurement unit combining a 3-axis accelerometer and 3-axis gyroscope in a single package. It communicates over I2C at address 0x6A or 0x6B, selectable via the SDO pin. The CS pin is tied to VDD_IO to select I2C mode. INT1 and INT2 are left unconnected as hardware interrupts are not used in this implementation.

5.3 Barometric Altimetry — LPS27HHWTR

The LPS27HHWTR is a high-performance MEMS barometric pressure sensor with an operational range of 260–1260 hPa, suitable for altitude determination throughout the flight envelope of a high-powered rocket. It communicates over I2C at address 0x5C or 0x5D, selectable via the SA0 pin. The RES pin is left unconnected per ST datasheet guidance.

5.4 Magnetometry — IIS2MDCTR

The IIS2MDCTR is a 3-axis magnetometer with a fixed I2C address of 0x1E. It supports I2C communication only. The device is used for heading determination and magnetic field logging. No address configuration is required.

5.5 I2C Bus Design and Addressing

Device	Part	I2C Address
IMU	LSM6DSVTR	0x6A or 0x6B
Barometer	LPS27HHWTR	0x5C or 0x5D
Magnetometer	IIS2MDCTR	0x1E (fixed)

Table 5.1: TALON-1B I2C Address Map

SDA and SCL lines are pulled up to 3.3V via 4.7kΩ resistors placed on the TALON-1B board. No additional pull-ups are placed on TALON-1A or TALON-1C to avoid bus loading.

5.6 Schematic

The schematic covers all three ST MEMS sensors, the shared I2C bus, pull-up resistors, and the decoupling network for each device.

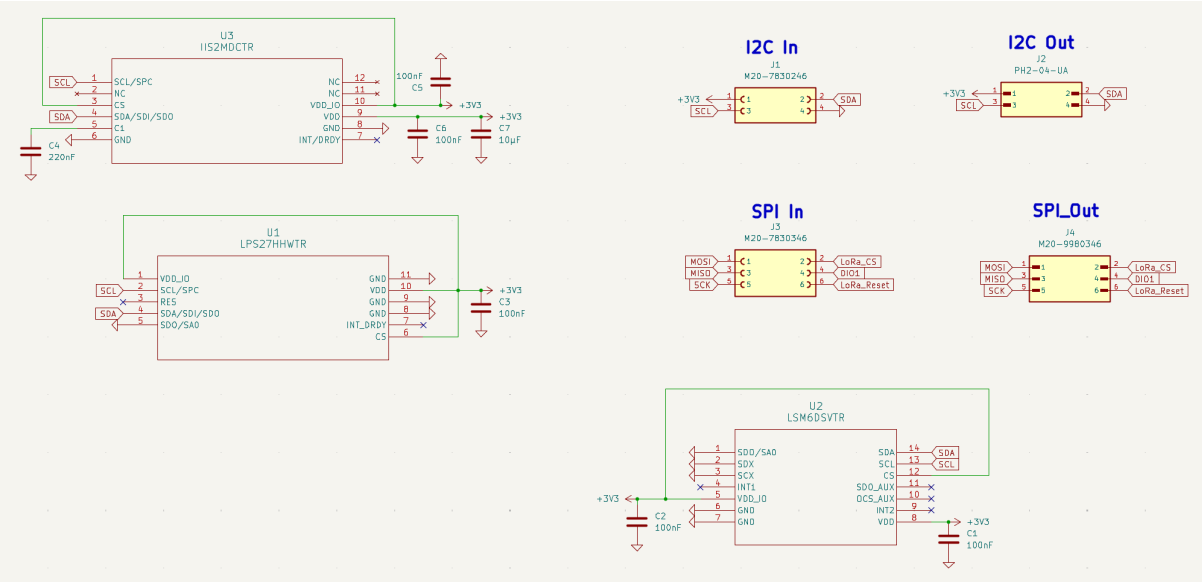

Figure 5.1: TALON-1B Sensing Module schematic showing the LSM6DSVTR IMU, LPS27HHWTR barometer, IIS2MDCTR magnetometer, and all decoupling capacitors.

5.7 PCB Layout

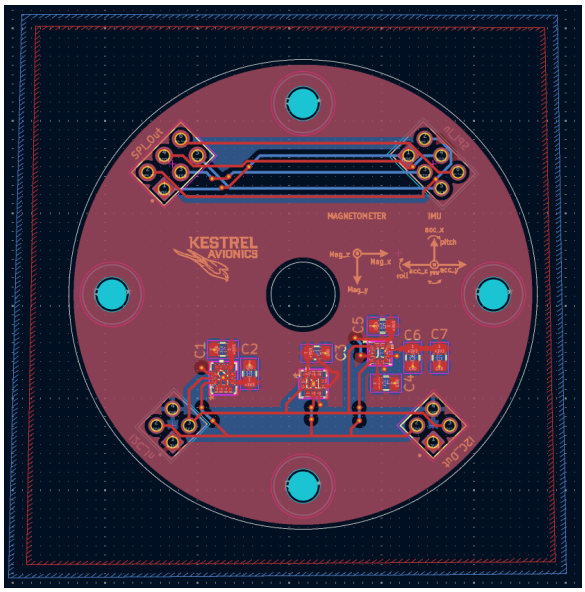

(a) Front copper layer (F.Cu) carrying the 3V3 power plane. All three sensors and the pin headers are mounted on this side.

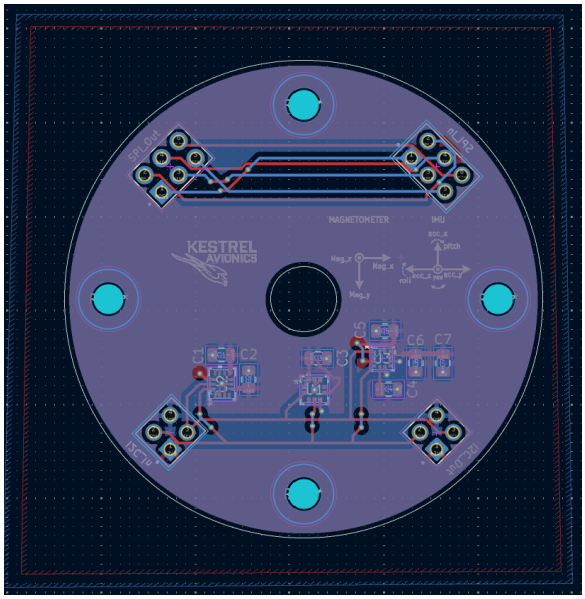

(b) Back copper layer (B.Cu) carrying the GND plane, providing a continuous ground reference beneath all components.

Figure 5.2: TALON-1B Sensing Module PCB layout, front and back copper layers.

5.8 3D View

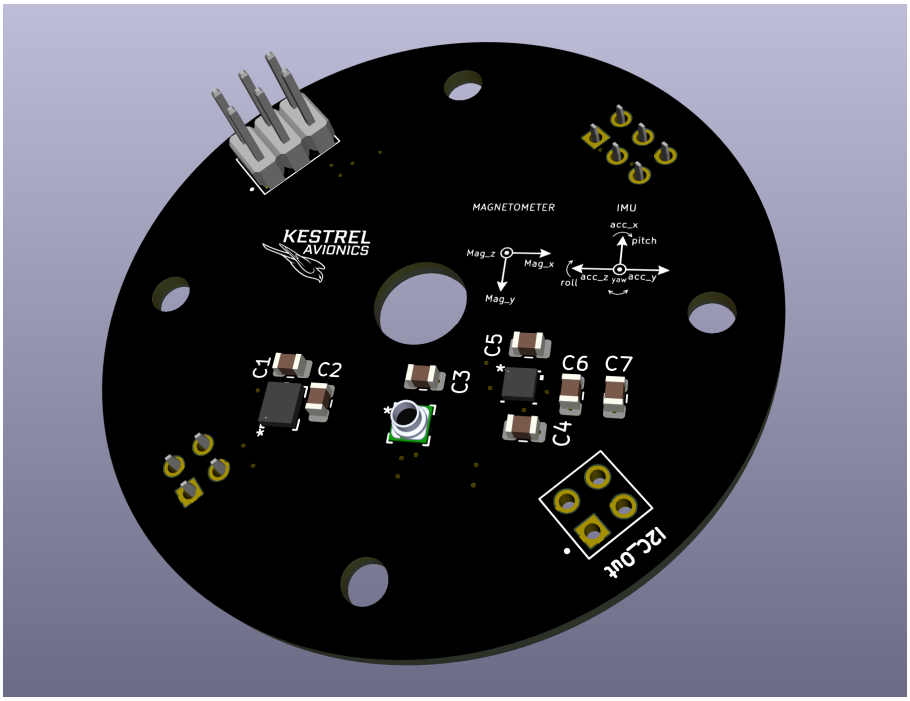

Figure 5.3: TALON-1B Sensing Module 3D render showing the assembled board with all three ST MEMS sensors, decoupling capacitors, and male and female 2.54mm pin headers for inter-board connection.

Chapter 6: TALON-1C: RF and Navigation Module

6.1 Overview and Purpose

The TALON-1C is the topmost board of the TALON-1 stack and is responsible for all RF communications and GNSS navigation. It hosts the RA-01H LoRa radio transceiver and the u-blox MAX-M10M GNSS receiver. The board receives all signals from the TALON-1B below via female 2.54mm pitch pin headers. Being at the top of the stack positions this board closest to any externally mounted antenna, minimising RF feedline losses.

6.2 GNSS Receiver — MAX-M10M

The u-blox MAX-M10M is a compact, high-sensitivity GNSS receiver supporting GPS, GLONASS, Galileo, and BeiDou constellations. It communicates over I2C at a fixed address of 0x42. The device is powered from the 3.3V rail and requires a connected antenna via a SMA connector.

6.3 Long Range Telemetry — RA-01H

The RA-01H is a 915MHz LoRa transceiver module based on the Semtech SX1262 core. It communicates with the STM32 over SPI and requires four additional control signals: CS, DIO1, and RESET. DIO1 is used as a transmit/receive completion interrupt. RESET is driven by an MCU GPIO and toggled during initialisation to ensure a clean startup state.

6.4 Antenna Considerations

The RA-01H module includes an onboard SMA connector for connection to an external antenna. A quarter-wave whip antenna cut for 915MHz is used, with a wire length of approximately 81.9mm calculated as:

$$L = \frac{c}{4f} = \frac{3 \times 10^8}{4 \times 915 \times 10^6} \approx 81.9 \text{ mm} \tag{6.1}$$

The MAX-M10M requires a separate GNSS antenna. Care should be taken to maintain adequate physical separation between the 915MHz antenna and the GNSS antenna to avoid desensitization of the GNSS receiver.

6.5 Schematic

The schematic covers the RA-01H LoRa module, the MAX-M10M GNSS receiver, SPI and I2C routing, and all associated decoupling and supporting passives.

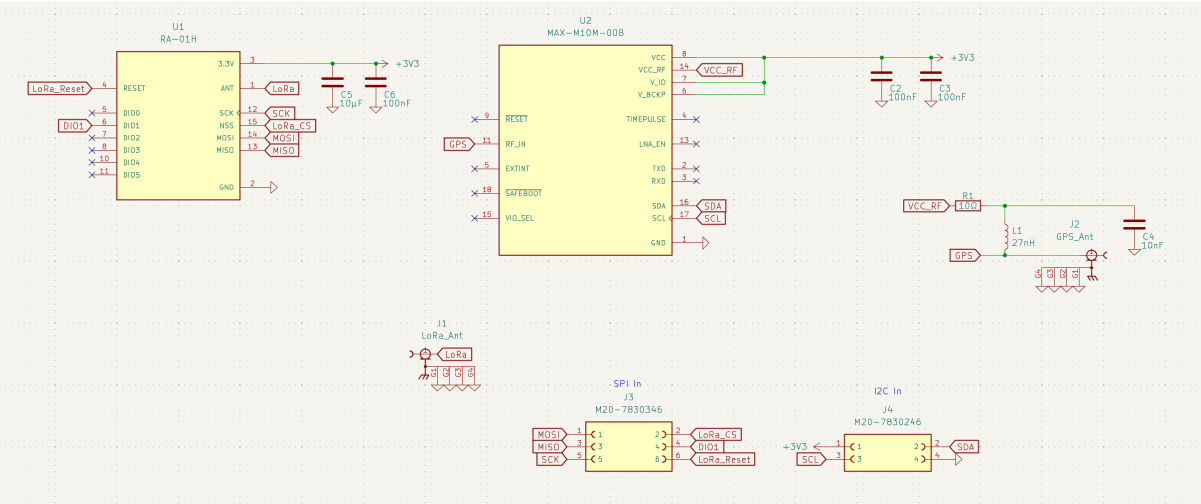

Figure 6.1: TALON-1C RF and Navigation Module schematic showing the RA-01H 915MHz LoRa transceiver, MAX-M10M GNSS receiver, SPI and I2C signal routing, antenna connectors, and decoupling network.

6.6 PCB Layout

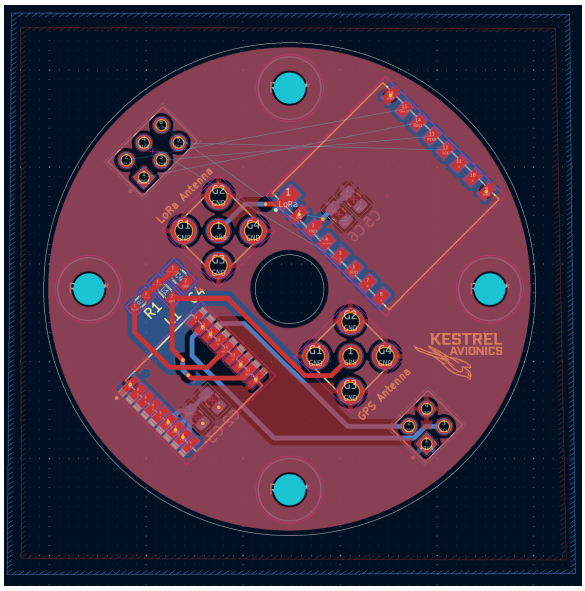

(a) Front copper layer (F.Cu) carrying the GND plane. The RA-01H module and MAX-M10M are mounted on this side alongside their associated decoupling capacitors.

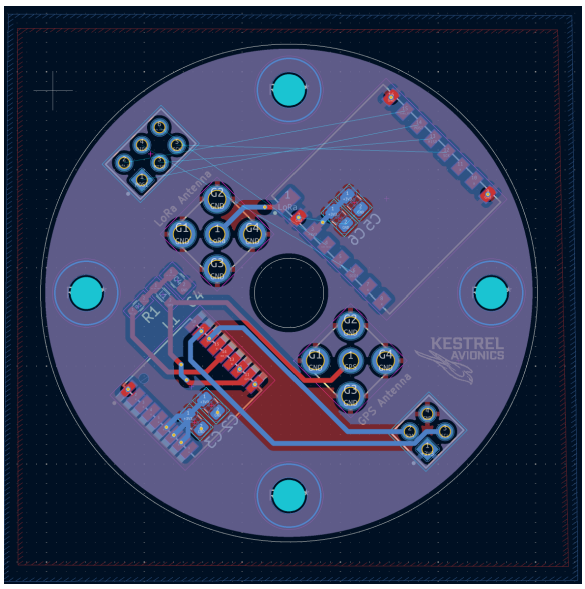

(b) Back copper layer (B.Cu) carrying the 3V3 power plane, distributing regulated power to all devices on the board.

Figure 6.2: TALON-1C RF and Navigation Module PCB layout, front and back copper layers.

6.7 3D View

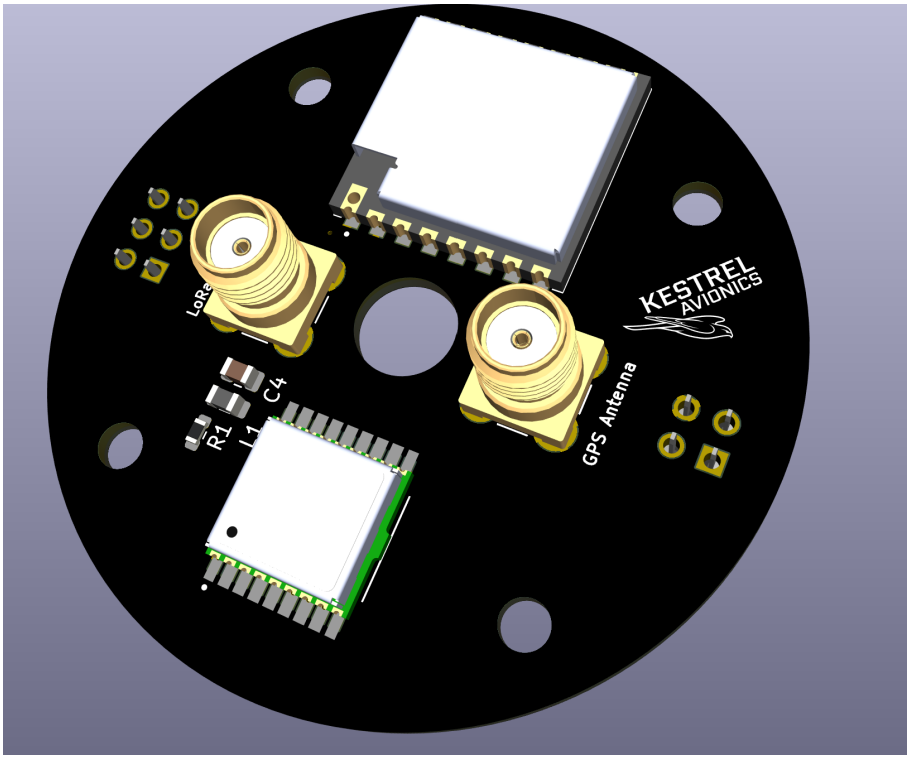

Figure 6.3: TALON-1C RF and Navigation Module 3D render showing the assembled board with the RA-01H LoRa module, MAX-M10M GNSS receiver, SMA antenna connector, u.FL GNSS antenna connector, and female 2.54mm input header.

Chapter 7: Firmware Architecture

7.1 Software Overview

The TALON-1 firmware is written in C++ using the Arduino framework via PlatformIO. It covers sensor acquisition, telemetry packet assembly and transmission, flight state machine logic, and in future revisions, sensor fusion via an extended Kalman filter and GNSS data parsing. The most current firmware is available on the project GitHub repository.

7.2 Project Structure

The firmware is organised into four functional modules, each contained in its own subfolder under `src/`. The full system is currently in development. Completed modules are indicated in Table 7.1.

Module	Files	Responsibility	Status
Utilities	i2c.h / i2c.cpp	I2C bus initialisation and read/write	Complete
Sensors	baro.h / baro.cpp	LPS27HHWTR barometer driver	In Development
	imu.h / imu.cpp	LSM6DSVTR IMU driver	In Development
	mag.h / mag.cpp	IIS2MDCTR magnetometer driver	Planned
	gps.h / gps.cpp	MAX-M10M GNSS receiver driver	Planned
Telemetry	telemetry.h / telemetry.cpp	Packet assembly and UART transmission	Complete
RF	LoRa.h / LoRa.cpp	RA-01H LoRa radio driver	Planned
Filter	ekf.h / ekf.cpp	Extended Kalman filter	Planned

Table 7.1: Firmware Module Overview

All pin definitions and timing constants are centralised in `config.h` at the root of the `src/` directory, as shown in Table 7.2.

Constant	Value
`I2C_SDA_PIN`	5 (PB5)
`I2C_SCL_PIN`	6 (PB6)
`I2C_CLOCK_HZ`	100000
`SERIAL_BAUD`	115200
`TELEMETRY_HZ`	20
`TELEMETRY_DELAY_MS`	50

Table 7.2: Key Configuration Constants

7.3 Telemetry Packet Protocol

The firmware transmits a fixed-length binary packet over UART at 115200 baud at a rate of 20 Hz. The packet format is transport independent and is designed to function identically over USB serial during development and over the RA-01H LoRa radio in flight.

Every packet begins with a two-byte header sequence `0x07 0x32` which the receiver uses to locate the start of each packet in the byte stream. The packet is terminated by a one-byte XOR checksum computed over all bytes between the header and the checksum field. Any packet that fails checksum verification is discarded by the receiver.

Byte(s)	Field	Type	Units	Notes
0–1	Header	uint8[2]	—	Always 0x07 0x32
2–5	Timestamp	uint32	ms	Milliseconds since boot
6–9	Pressure	float32	Pa	Pascals
10–13	Temperature	float32	K	Kelvin
14–17	Altitude	float32	m	Metres above ground
18–21	Accel X	float32	g	
22–25	Accel Y	float32	g	
26–29	Accel Z	float32	g	
30–33	Gyro X	float32	dps	Degrees per second
34–37	Gyro Y	float32	dps	
38–41	Gyro Z	float32	dps	
42	Flight State	uint8	—	See Table 7.4
43	Checksum	uint8	—	XOR of bytes 2–42

Table 7.3: Telemetry Packet Structure

The total packet size is 44 bytes. All multi-byte fields are transmitted in little-endian byte order, consistent with the ARM Cortex-M native byte order.

The checksum is computed as follows:

```
uint8_t chk = 0;
for (size_t i = 0; i < PACKET_SIZE - 3; i++)
    chk ^= bytes[i];
```

7.4 Flight State Machine

The firmware implements a flight state machine with eight states representing the complete flight profile of a dual-deploy rocket. The current state is included in every telemetry packet and is displayed on the ground station application in real time.

Value	State	Description
0	IDLE	Waiting on pad, sensors initialising
1	ARMED	Pyrotechnic charges armed, ready for launch
2	ASCENT	Motor burning, positive vertical acceleration
3	COAST	Motor burnout, unpowered ascent
4	APOGEE	Peak altitude reached, drogue charge fires
5	DESCENT	Descending under drogue parachute
6	MAIN	Main parachute deployed at low altitude
7	LANDED	Ground contact confirmed

Table 7.4: Flight State Definitions

7.5 Sensor Acquisition

Sensors are read once per telemetry cycle at 20 Hz. Each sensor read function returns a boolean indicating success. If a read fails, the corresponding fields in the telemetry packet are set to zero and the packet is transmitted regardless, allowing the ground station to detect sensor failures in real time.

Altitude is computed from barometric pressure using the hypsometric formula relative to a ground-level reference pressure sampled at startup:

$$h = 44330\left(1 - \left(\frac{P}{P_0}\right)^{0.1903}\right) \tag{7.1}$$

where P is the current pressure in Pascals and P_0 is the ground-level reference pressure. The ground reference is averaged over 20 samples at 200 ms intervals during the initialisation sequence to reduce noise.

7.6 Sensor Fusion — Extended Kalman Filter

A future revision of the firmware will implement an extended Kalman filter to fuse accelerometer, gyroscope, magnetometer, and barometric altitude data into a single optimal state estimate. The EKF will provide accurate attitude determination and altitude estimation with gyroscope drift correction. This module is planned and will be implemented in `ekf.h` and `ekf.cpp`.

7.7 Ground Station Interface

A companion Python application receives and displays telemetry in real time. The application parses incoming packets using the packet structure defined in Table 7.3 and displays live readouts of all sensor channels, the current flight state, and a 3D visualisation of rocket orientation derived from gyroscope integration. The application is compatible with any flight computer that transmits packets conforming to this specification, regardless of the underlying hardware.