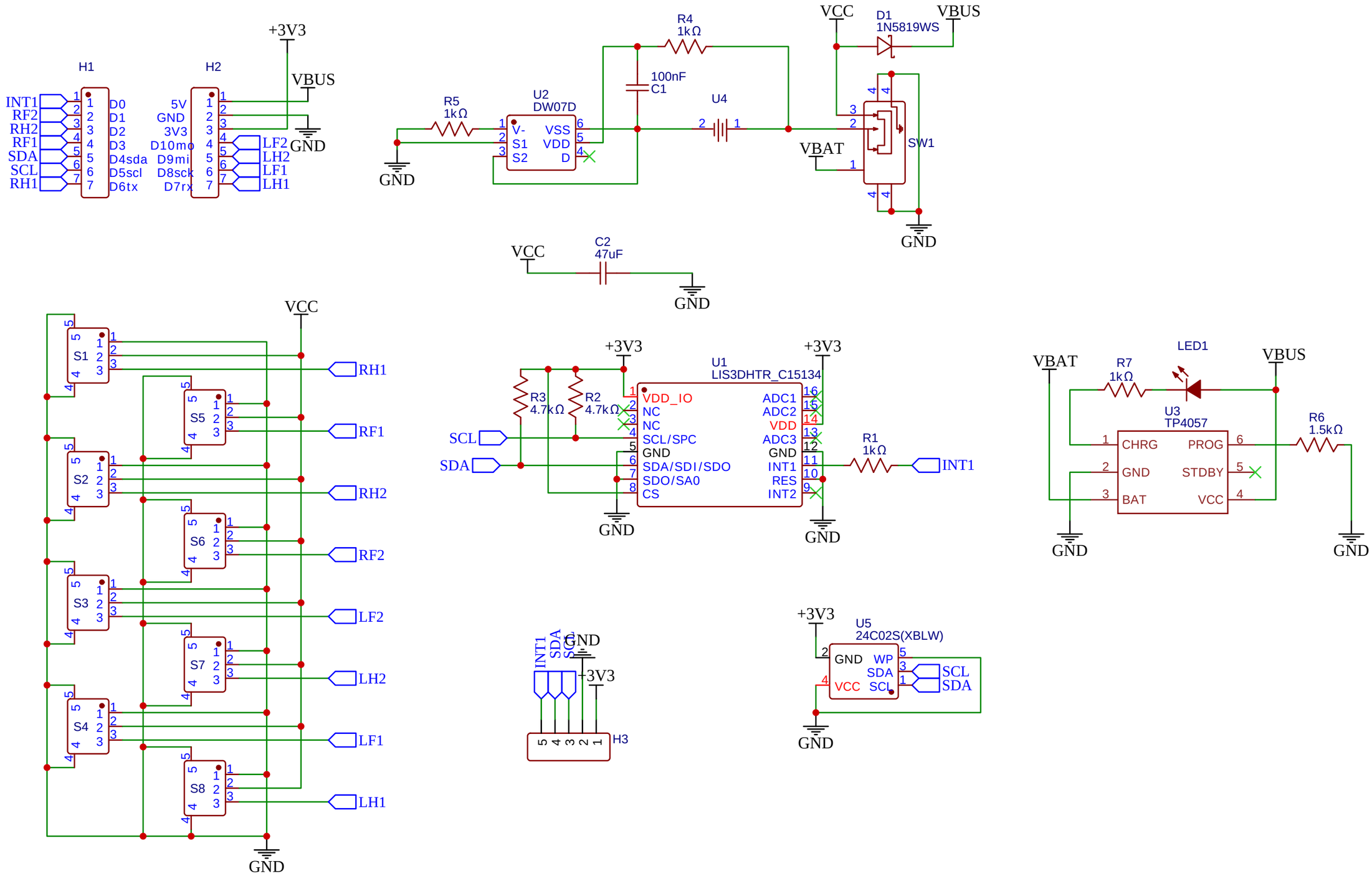

TITLE: Wee Bug	REV: 8.0
嘉立创EDA	Company: deshipu
	Sheet: 1/1
	Date: 2022-12-29 Drawn By: deshipu