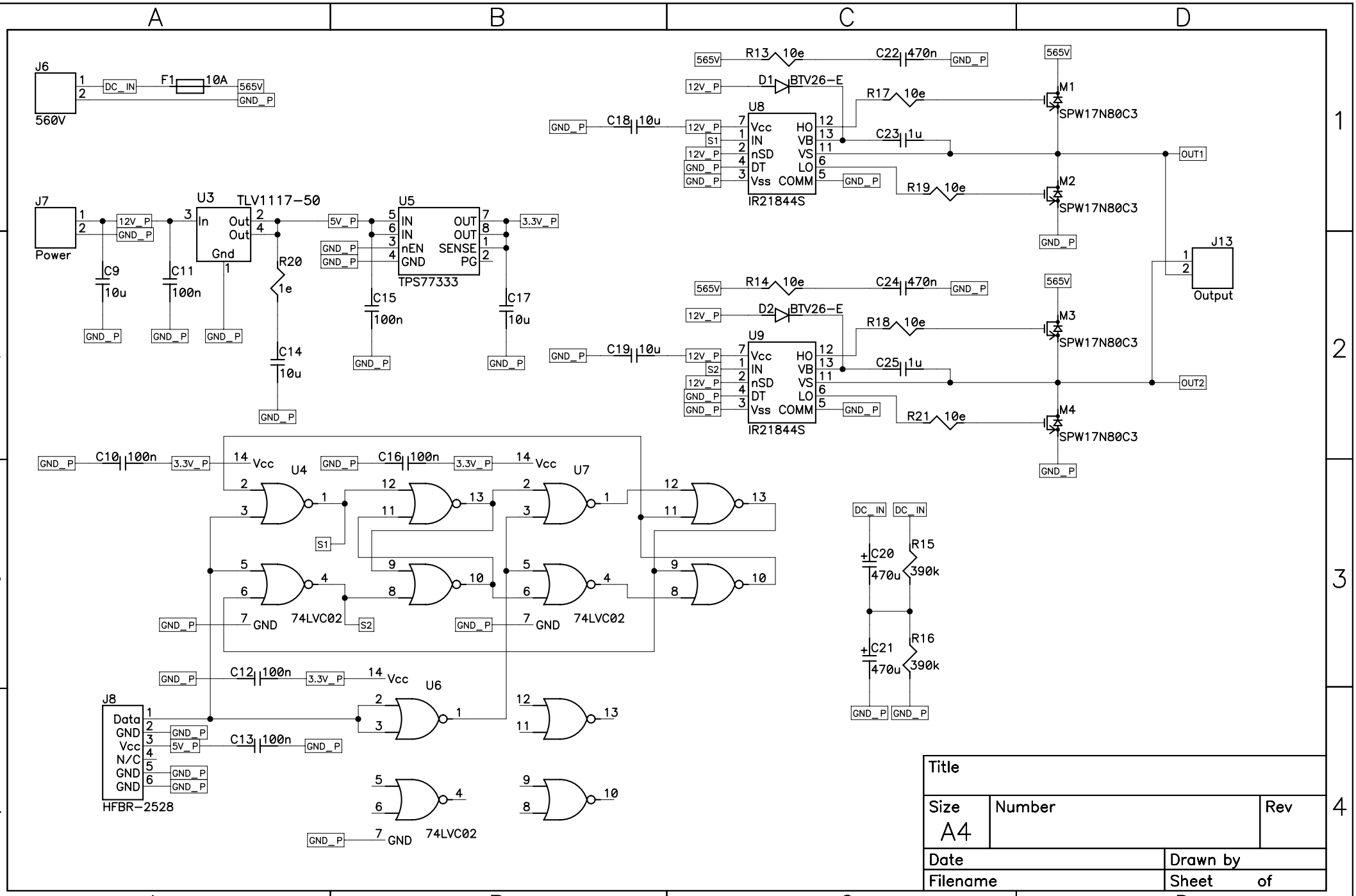

Title		
Size A4	Number	Rev
Date	Drawn by	
Filename	Sheet of	