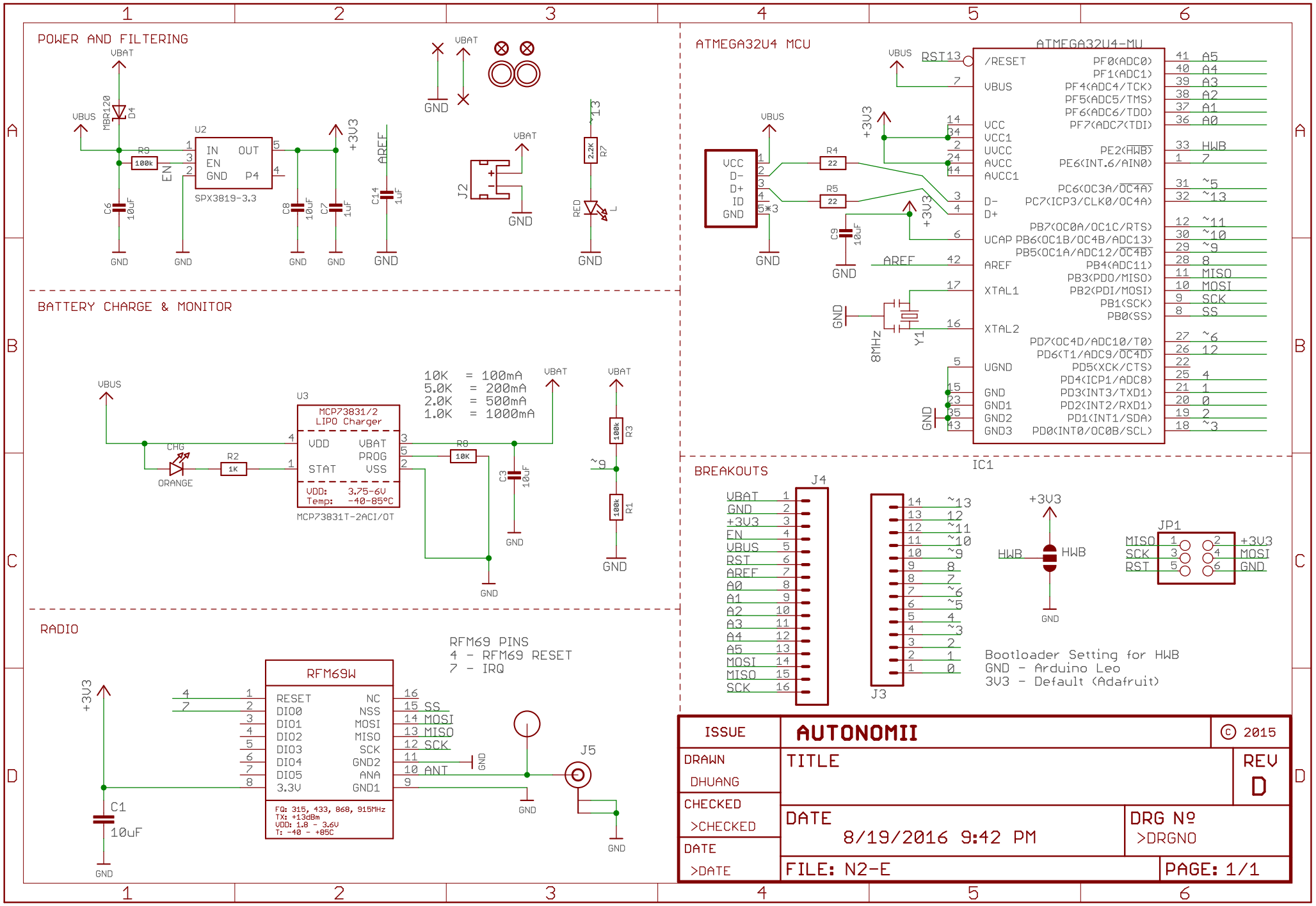
POWER AND FILTERING
VBAT
VBUS
MBR120
D4
R9
100k
EN
U2
IN
EN
GND
OUT
P4
SPX3819-3.3
+3V3
C6
10uF
C8
10uF
C7
1uF
C14
1uF
AREF
GND
VBAT
J2
~13
2.2K
R7
RED
L
BATTERY CHARGE & MONITOR
VBUS
U3
MCP73831/2
LIPO Charger
VDD
STAT
VBAT
PROG
VSS
VDD: 3.75-6V
Temp: -40-85°C
MCP73831T-2ACI/OT
CHG
R2
1K
ORANGE
10K = 100mA
5.0K = 200mA
2.0K = 500mA
1.0K = 1000mA
R8
10K
C3
10uF
R3
100k
R1
100k
RADIO
RFM69 PINS
4 - RFM69 RESET
7 - IRQ
RFM69W
RESET
DIO0
DIO1
DIO2
DIO3
DIO4
DIO5
3.3V
NC
NSS
MOSI
MISO
SCK
GND2
ANA
GND1
FQ: 315, 433, 868, 915MHz
TX: +13dBm
VDD: 1.8 - 3.6V
T: -40 - +85C
C1
10uF
J5
ATMEGA32U4 MCU
ATMEGA32U4-MU
/RESET
VBUS
VCC
VCC1
UVCC
AVCC
AVCC1
D-
D+
UCAP
AREF
XTAL1
XTAL2
UGND
GND
GND1
GND2
GND3
PF0(ADC0)
PF1(ADC1)
PF4(ADC4/TCK)
PF5(ADC5/TMS)
PF6(ADC6/TDO)
PF7(ADC7(TDI)
PE2(HWB)
PE6(INT.6/AIN0)
PC6(OC3A/OC4A)
PC7(ICP3/CLK0/OC4A)
PB7(OC0A/OC1C/RTS)
PB6(OC1B/OC4B/ADC13)
PB5(OC1A/ADC12/OC4B)
PB4(ADC11)
PB3(PDO/MISO)
PB2(PDI/MOSI)
PB1(SCK)
PB0(SS)
PD7(OC4D/ADC10/T0)
PD6(T1/ADC9/OC4D)
PD5(XCK/CTS)
PD4(ICP1/ADC8)
PD3(INT3/TXD1)
PD2(INT2/RXD1)
PD1(INT1/SDA)
PD0(INT0/OC0B/SCL)
RST13
R4
22
R5
22
C9
10uF
8MHz
Y1
IC1
BREAKOUTS
J4
VBAT
GND
+3V3
EN
VBUS
RST
AREF
A0
A1
A2
A3
A4
A5
MOSI
MISO
SCK
J3
HWB
JP1
MISO
SCK
RST
+3V3
MOSI
GND
Bootloader Setting for HWB
GND - Arduino Leo
3V3 - Default (Adafruit)
ISSUE
AUTONOMII
© 2015
DRAWN
DHUANG
TITLE
REV
D
CHECKED
>CHECKED
DATE
8/19/2016 9:42 PM
DRG Nº
>DRGNO
DATE
>DATE
FILE: N2-E
PAGE: 1/1