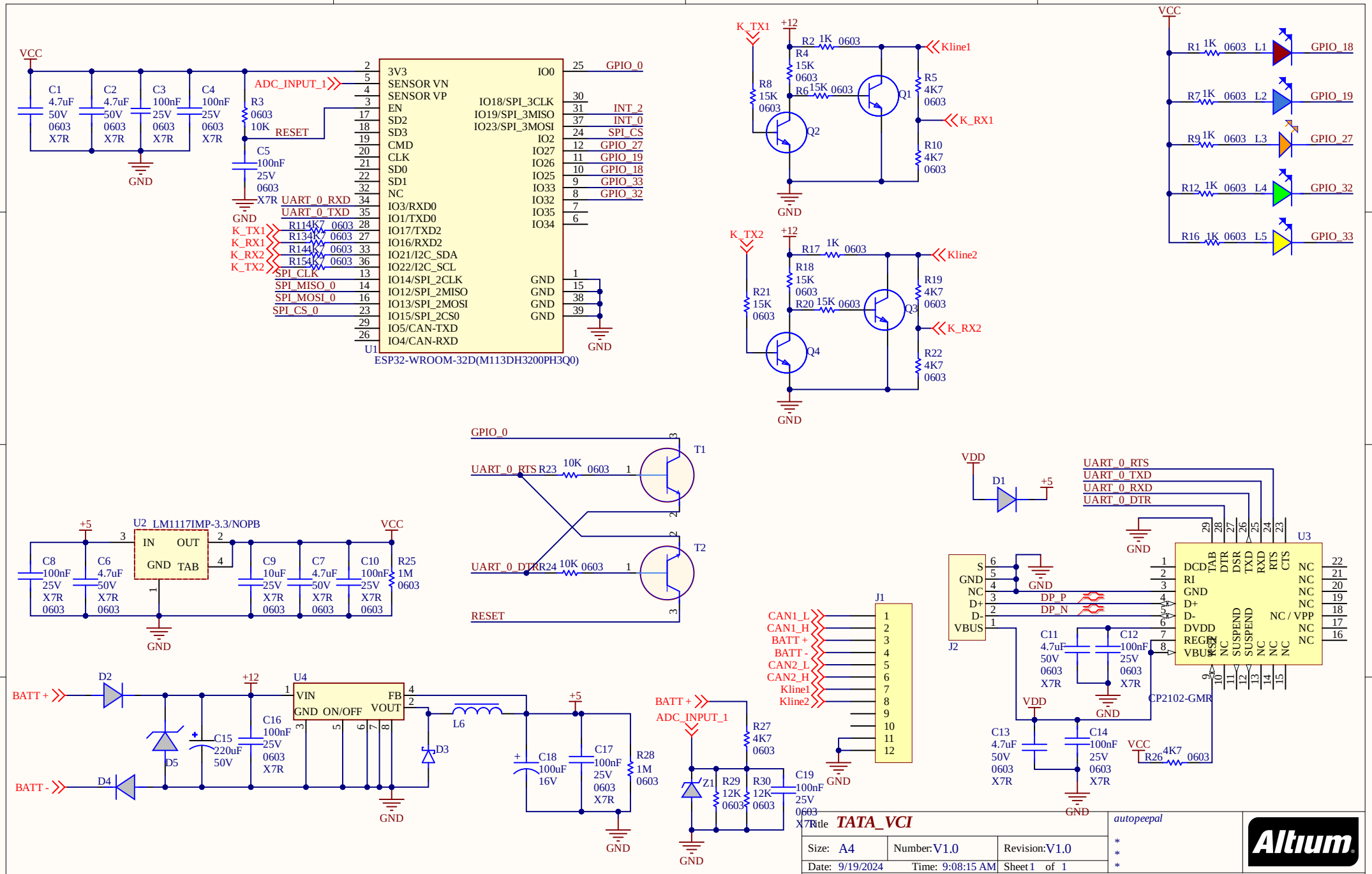
VCC
C1 4.7uF 50V 0603 X7R
C2 4.7uF 50V 0603 X7R
C3 100nF 25V 0603 X7R
C4 100nF 25V 0603 X7R
GND
ADC_INPUT_1
R3 0603 10K
RESET
C5 100nF 25V 0603 X7R
UART_0_RXD
UART_0_TXD
K_TX1
K_RX1
K_RX2
K_TX2
R11 4K7 0603
R13 4K7 0603
R14 4K7 0603
R15 4K7 0603
SPI_CLK
SPI_MISO_0
SPI_MOSI_0
SPI_CS_0
3V3
SENSOR VN
SENSOR VP
EN
SD2
SD3
CMD
CLK
SD0
SD1
NC
IO3/RXD0
IO1/TXD0
IO17/TXD2
IO16/RXD2
IO21/I2C_SDA
IO22/I2C_SCL
IO14/SPI_2CLK
IO12/SPI_2MISO
IO13/SPI_2MOSI
IO15/SPI_2CS0
IO5/CAN-TXD
IO4/CAN-RXD
IO0
IO18/SPI_3CLK
IO19/SPI_3MISO
IO23/SPI_3MOSI
IO2
IO27
IO26
IO25
IO33
IO32
IO35
IO34
GND
GPIO_0
INT_2
INT_0
SPI_CS
GPIO_27
GPIO_19
GPIO_18
GPIO_33
GPIO_32
U1
ESP32-WROOM-32D(M113DH3200PH3Q0)
K_TX1
+12
R2 1K 0603
R4 15K 0603
R6 15K 0603
R8 15K 0603
Q1
Q2
Kline1
R5 4K7 0603
K_RX1
R10 4K7 0603
K_TX2
R17 1K 0603
R18 15K 0603
R20 15K 0603
R21 15K 0603
Q3
Q4
Kline2
R19 4K7 0603
K_RX2
R22 4K7 0603
R1 1K 0603 L1 GPIO_18
R7 1K 0603 L2 GPIO_19
R9 1K 0603 L3 GPIO_27
R12 1K 0603 L4 GPIO_32
R16 1K 0603 L5 GPIO_33
+5
U2 LM1117IMP-3.3/NOPB
IN
OUT
GND
TAB
C8 100nF 25V X7R 0603
C6 4.7uF 50V X7R 0603
C9 10uF 25V X7R 0603
C7 4.7uF 50V X7R 0603
C10 100nF 25V X7R 0603
R25 1M 0603
GPIO_0
UART_0_RTS
R23 10K 0603
T1
UART_0_DTR
R24 10K 0603
T2
RESET
VDD
D1
UART_0_RTS
UART_0_TXD
UART_0_RXD
UART_0_DTR
U3
DCD
RI
GND
D+
D-
DVDD
REGEN
VBUS
TAB
DTR
DSR
TXD
RXD
RTS
CTS
NC
NC / VPP
SUSPEND
J2
S
GND
NC
D+
D-
VBUS
DP_P
DP_N
C11 4.7uF 50V 0603 X7R
C12 100nF 25V 0603 X7R
CP2102-GMR
C13 4.7uF 50V 0603 X7R
C14 100nF 25V 0603 X7R
VCC
R26 4K7 0603
J1
CAN1_L
CAN1_H
BATT +
BATT -
CAN2_L
CAN2_H
Kline1
Kline2
BATT +
D2
BATT -
D4
D5
C15 220uF 50V
+12
C16 100nF 25V 0603 X7R
U4
VIN
GND
ON/OFF
FB
VOUT
L6
D3
C18 100uF 16V
C17 100nF 25V 0603 X7R
R28 1M 0603
ADC_INPUT_1
R27 4K7 0603
Z1
R29 12K 0603
R30 12K 0603
C19 100nF 25V 0603 X7R
Title TATA_VCI
Size: A4
Number: V1.0
Revision: V1.0
Date: 9/19/2024
Time: 9:08:15 AM
Sheet 1 of 1
File: D:\Autopeepel\HW_CAN2x_FD\CAN2XG.SchDoc
autopeepal
Altium

THIS DOCUMENT AND THE DATA DISCLOSED HEREIN OR HEREWITH IS THE PROPERTY OF ALTIUM LIMITED AND MAY BE FREELY DISTRIBUTED IN WHOLE. NO RIGHTS ARE RESERVED OR EXPRESS OR IMPLIED WARANTEE GIVEN.

REVISION	DESCRIPTION	DATE	APPROVED

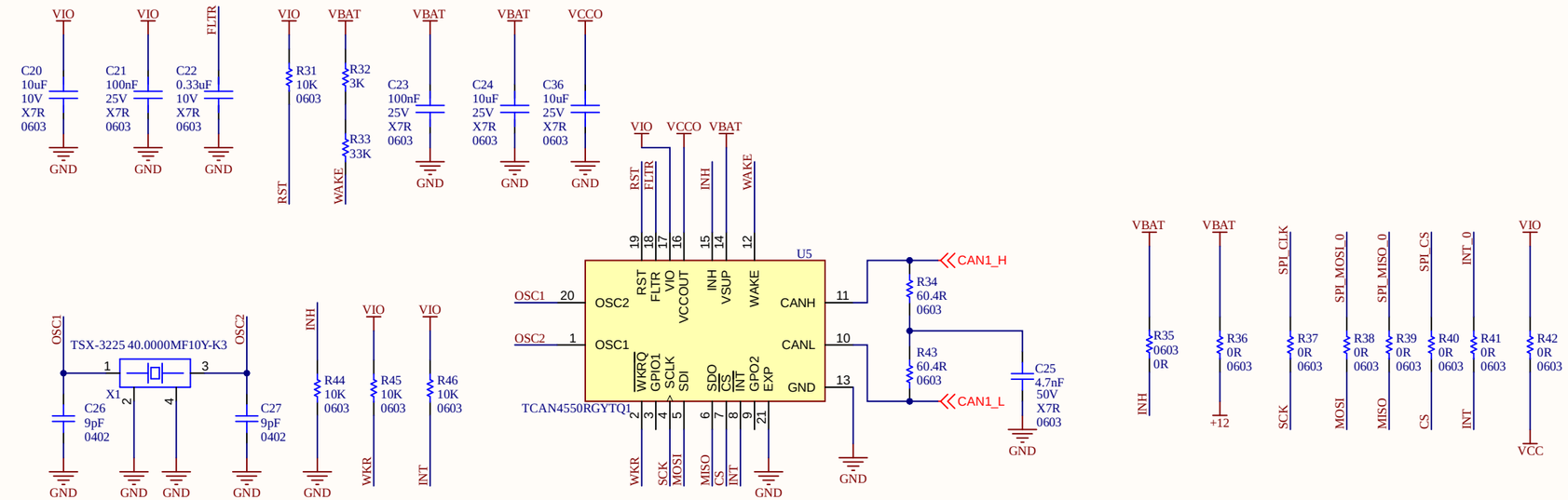

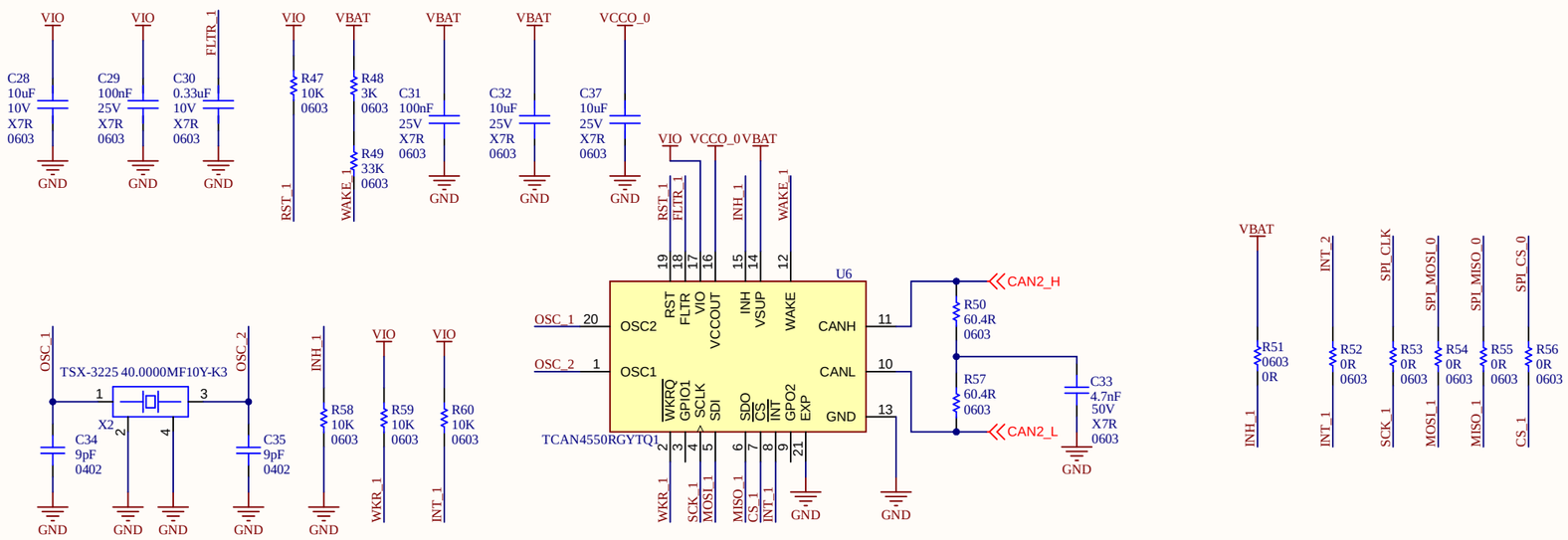

APPROVALS	DATE
ENG: *	--/--/--
DSN: *	--/--/--
CHK: *	--/--/--
REFERENCE DOCUMENTS	
BOM:	
ASSY DWG:	
FAB DWG:	
PCB DWG:	

PROJECT *

Altium

ADDRESS 1
ADDRESS 2
ADDRESS 3
ADDRESS 4

PROJECT REVISION: DOCUMENT REVISION: DESIGN ITEM ID: 85dd15a761e682e73363

TITLE *

SIZE B | CAGE CODE | DWG NO. | REV

SCALE: | FILE NAME CAN2XG_TCAN.SchDoc | SHEET * OF *