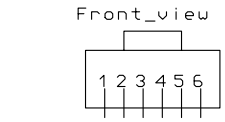

Pin 1 and 6 not used

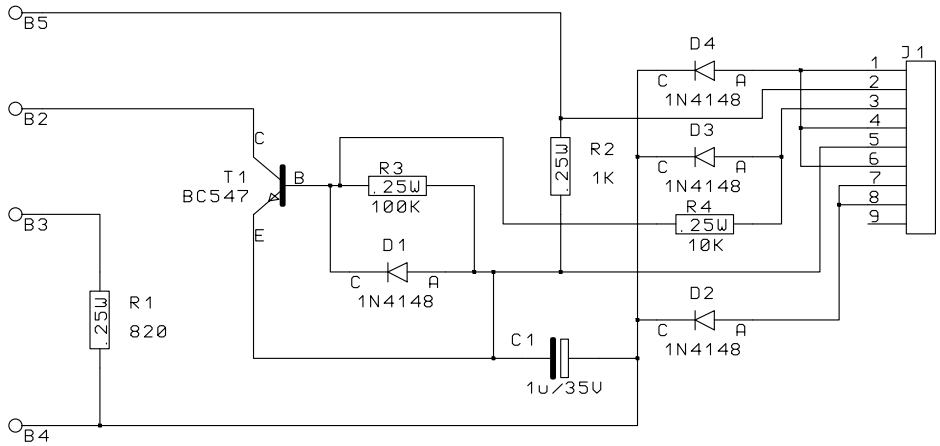

Inside the Soladin 600

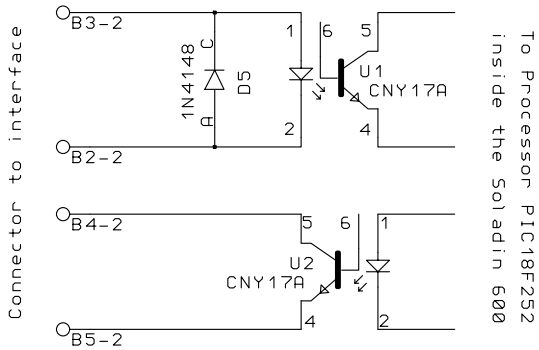

Property of :		
Project : Soladin 600	Rev : 1	Sub 0
Subname : PC-Interface	Date : 30-Sep-2006	
Hardware Engineer : CAD Engineer :		
Company : Address : City : State : Nederland		
Initial date Aug 2006	Page : 1	of : 1