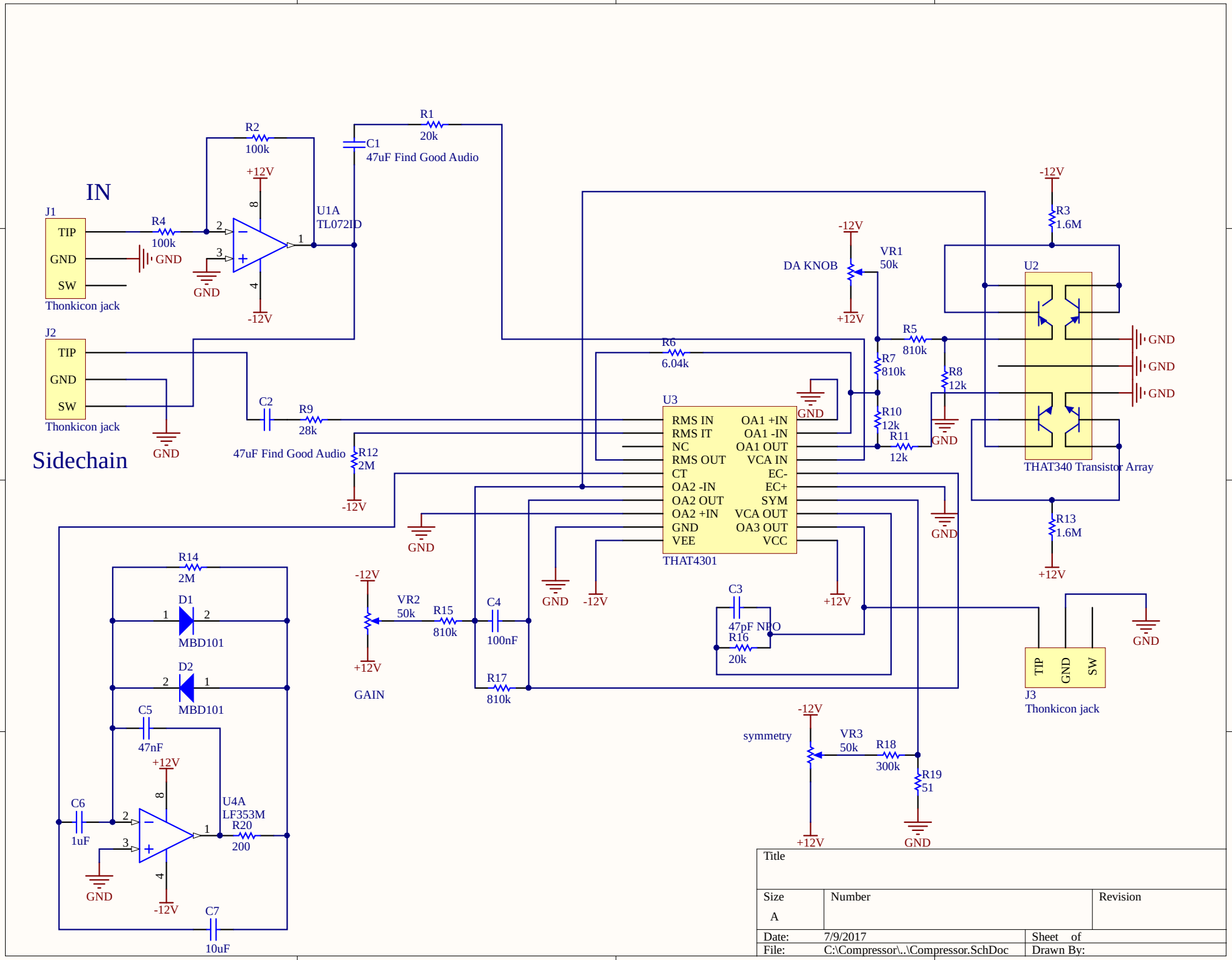
IN
J1
TIP
GND
SW
Thonkicon jack
R4
100k
R2
100k
+12V
-12V
U1A
TL072ID
C1
47uF Find Good Audio
R1
20k
J2
TIP
GND
SW
Thonkicon jack
Sidechain
C2
47uF Find Good Audio
R9
28k
R12
2M
R6
6.04k
U3
RMS IN
RMS IT
NC
RMS OUT
CT
OA2 -IN
OA2 OUT
OA2 +IN
GND
VEE
OA1 +IN
OA1 -IN
OA1 OUT
VCA IN
EC-
EC+
SYM
VCA OUT
OA3 OUT
VCC
THAT4301
DA KNOB
VR1
50k
R5
810k
R7
810k
R8
12k
R10
12k
R11
12k
R3
1.6M
U2
THAT340 Transistor Array
R13
1.6M
R14
2M
D1
MBD101
D2
MBD101
C5
47nF
C6
1uF
U4A
LF353M
R20
200
C7
10uF
VR2
50k
R15
810k
C4
100nF
R17
810k
GAIN
C3
47pF NPO
R16
20k
symmetry
VR3
50k
R18
300k
R19
51
J3
Thonkicon jack
Title
Size
A
Number
Revision
Date: 7/9/2017
Sheet of
File: C:\Compressor\..\Compressor.SchDoc
Drawn By: