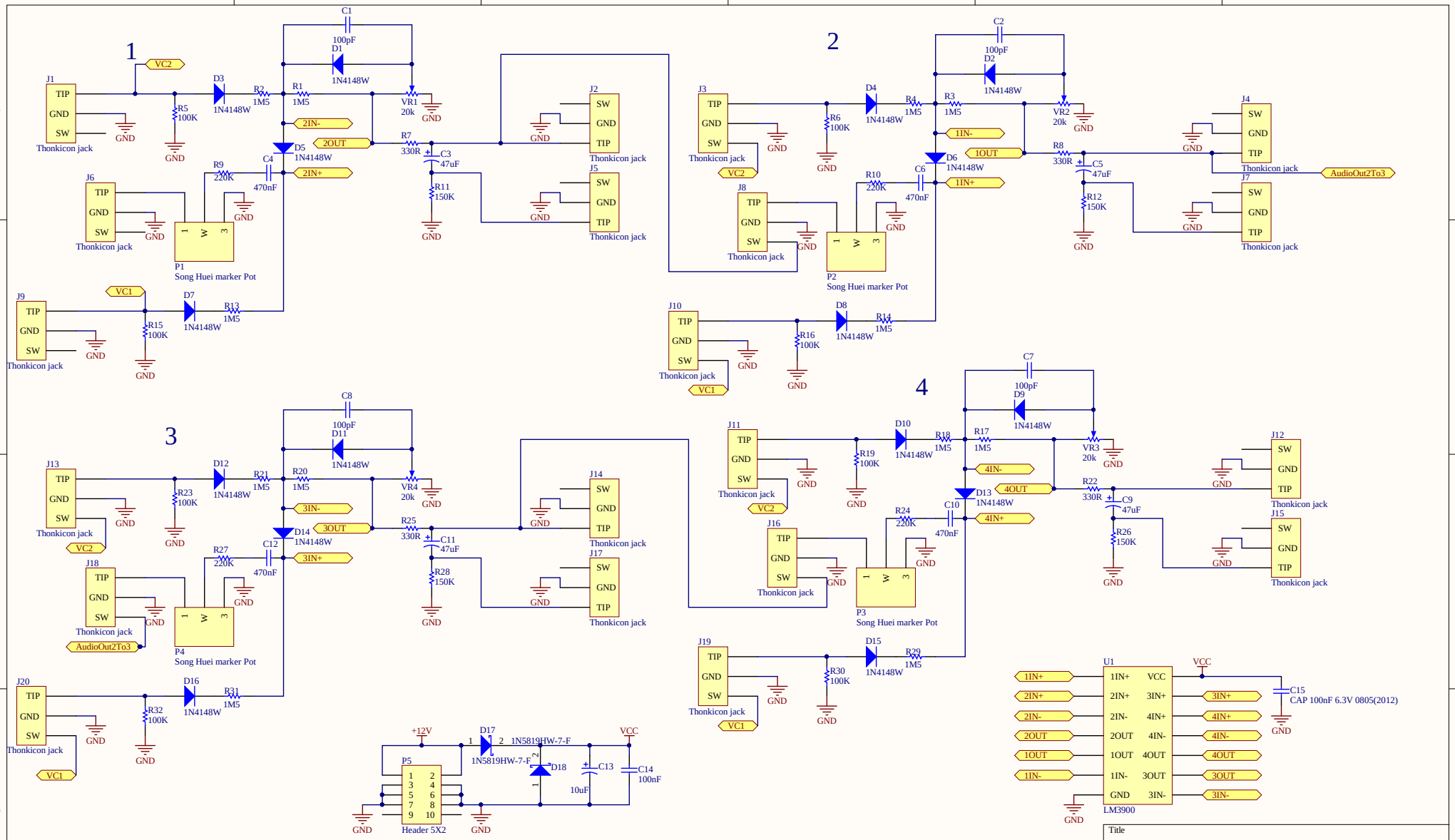

Title		
Size B	Number	Revision
Date: 9/29/2016		Sheet of
File: C:\Users\..\Wavefolder.SchDoc		Drawn By:

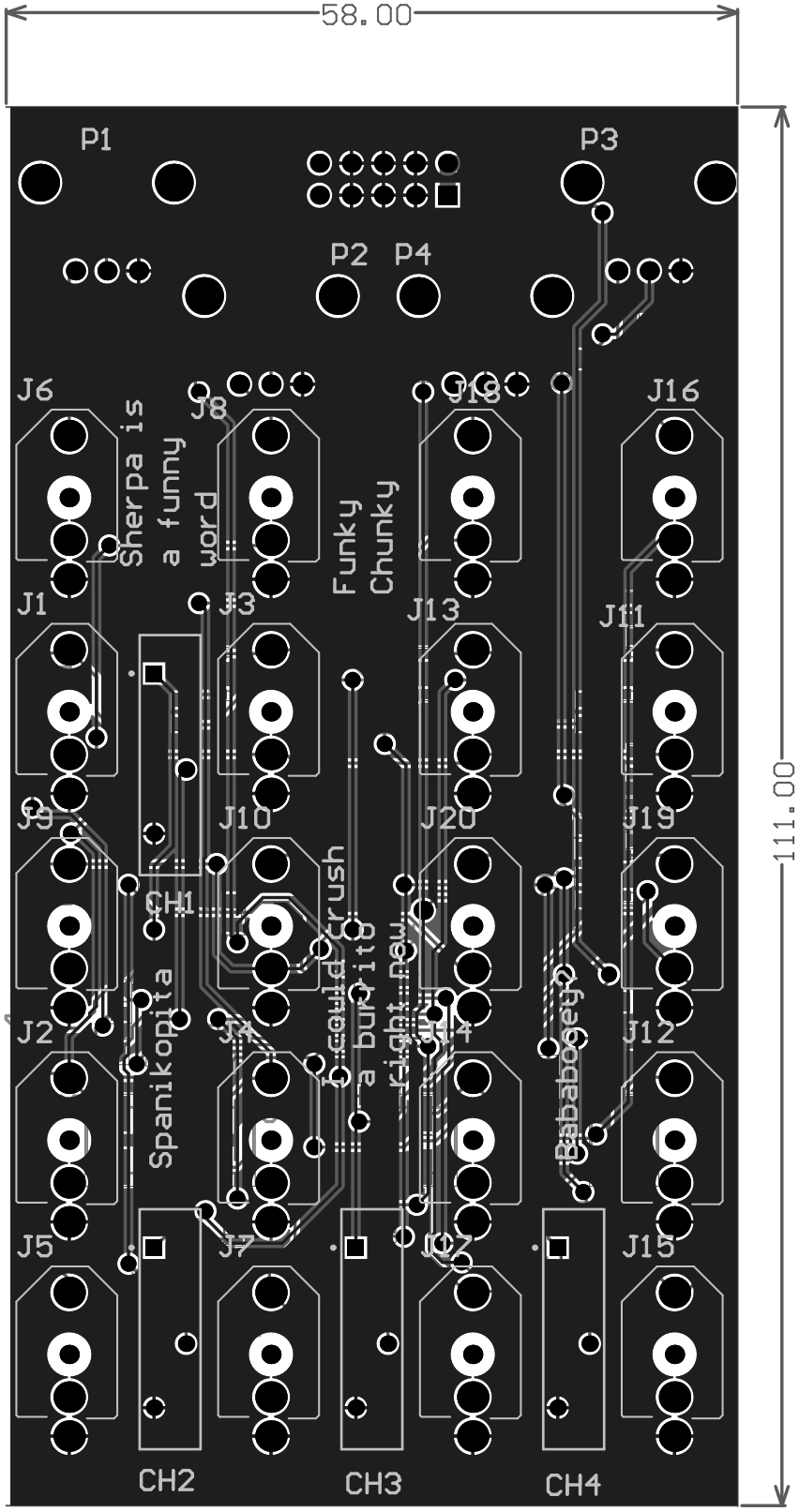
58.00
111.00
P1
P2
P3
P4
J1
J2
J3
J4
J5
J6
J7
J8
J9
J10
J11
J12
J13
J14
J15
J16
J17
J18
J19
J20
CH1
CH2
CH3
CH4
Sherpa is a funny word
Funky Chunky
Spanikopita
I could crush a burrito
Right now
Bababooey2